Bosch Rexroth Z2FS10A5-3X/S2V throttle check valve

Manufacturer: Bosch Rexroth

Manufacturer part number / published order designation: R900523578

Published model: Z2FS10A5-3X/S2V

About this compilation

Prepared by Hydmaster from selected manufacturer documentation. Original technical pages follow without cropped drawings, rewritten data or altered units. This cover and index are Hydmaster editorial material, not a manufacturer-issued exact-execution datasheet.

Coverage: selected pages relevant to the identified size and configuration. Other options or neighbouring models retained on an original page apply only where explicitly identified.

Execution notes and conditions

The dimension figure illustrates optional X/Y ducts. These selected codes have no XY suffix; the optional ducts must not be attributed to this execution.

Source-page index

Source page numbers below are physical pages of each complete original PDF. The original printed page labels and technical content remain unchanged. Compiled page numbers count this cover/index.

Source A: Bosch Rexroth Throttle Check Valve Re27518

Original pages	Compiled pages	Relevant content
1-6	2-7	NG10 series overview; Decode the existing S2/adjustment/seal execution; Applicable working-line symbols; Throttle and check hydraulic function; Series technical limits, fluids and seal conditions; Flow/pressure characteristic curves with HLP46 at 40 ±5 °C
8	8	Applicable A geometry; drawing shows optional X/Y ducts, absent from this unsuffixed execution
10-11	9-10	Dimension item legend and stack-dependent mounting screw requirements; Further referenced operating information

RE 27518
Edition: 2025-06
Replaces: 2019-07

Throttle check valve

Type Z2FS

R0064

- Size 10
- Component series 3X
- Maximum operating pressure 350 bar
- Maximum flow 160 l/min

Features

- Sandwich plate design
- For use in vertical stackings
- Porting pattern according to ISO 4401-05-04-0-05
- For the main or pilot flow limitation of 2 actuator ports.
- 2 adjustment types, optional:
  - Lockable rotary knob with scale
  - Spindle with internal hexagon and scale
- For supply or discharge throttling
- Corrosion-protected design, optional

Contents

Features	1
Ordering code	2
Symbols	3
Function, section	4
Technical data	5
Characteristic curves	6
Dimensions	7 ... 10
Further information	11

Ordering code

01	02	03	04		05		06	07	08	09	10
Z2FS	**10**			**–**	**3X**	**/**					*****

01	Twin throttle check valve, sandwich plate design	**Z2FS**	
02	Size 10	**10**	
03	Throttle check valve side A and B	**–** [1]	◇
	Throttle check valve side A	**A**	
	Throttle check valve side B	**B**	

Adjustment type

04	Lockable rotary knob with scale	**3** [2]	
	Spindle with internal hexagon and scale	**5**	◇
05	Component series 30 ... 39 (30 ... 39: unchanged installation and connection dimensions)	**3X**	
06	With two throttle check valves, supply or discharge throttling (the valve can be rotated)	**no code**	◇
	Supply throttling on side A (version "A...S") Supply throttling on side B (version "B...S")	**S**	
	Discharge throttling on side A (version "A...S2") Discharge throttling on side B (version "B...S2")	**S2**	

Corrosion resistance

07	None	**no code**	◇
	Improved corrosion protection (240 h salt spray test according to EN ISO 9227); (only version "5" without scale)	**J3**	

Seal material (observe compatibility of seals with hydraulic fluid used, see page 5)

08	NBR seals	**M**	◇
	FKM seals	**V**	

Pilot oil duct

09	None	**no code**	◇
	Via channel X and Y	**XY**	
10	Further details in the plain text		

[1] Identical adjustment types on sides A and B

[2] H-key with material no. **R900008158** is included in the scope of delivery.

☞ **Notice:** ◇ = Preferred type

Symbols (① = component side, ② = plate side)

Supply throttling "S"

Version **"–...XY"**

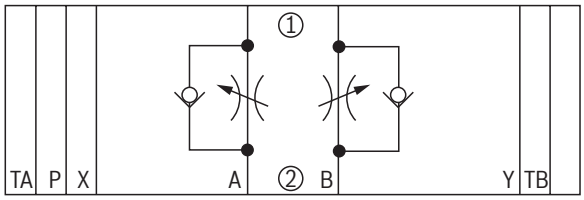

Version **"A...XY"**

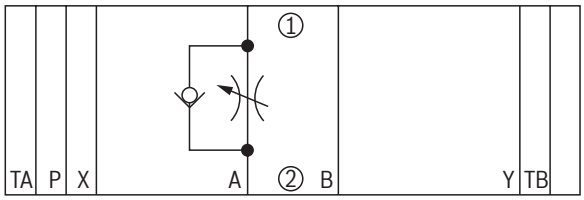

Version **"B...XY"**

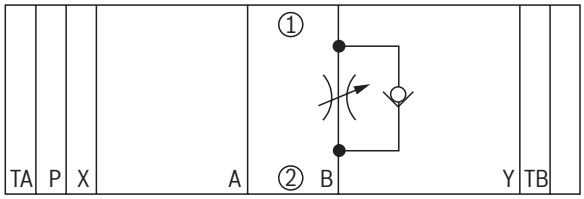

Discharge throttling "S2"

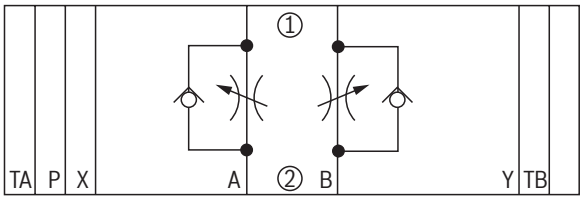

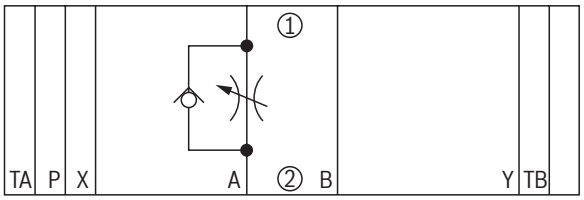

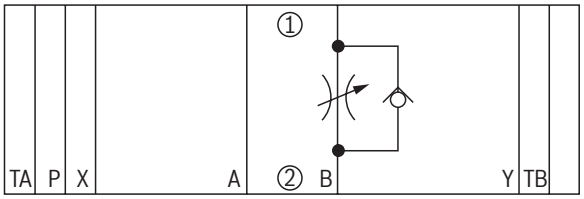

☞ **Notice:**

- ▶ Deviating from ISO 4401, port T is called TA and port T1 is called TB in this data sheet.
- ▶ Version "XY" is shown. The standard version does not have ports X and Y.

Function, section

The valve type Z2FS 10 is a throttle check valve in sandwich plate design. It is used for the main or pilot flow limitation of one or two actuator ports.
Two throttle check valves aligned symmetrically to each other limit flows in one direction and allow free return flow in the opposite direction.
In case of supply throttling, the hydraulic fluid is directed through channel A① via throttling point (1) formed by the control edge (2) and the throttle spool (3.1) to actuator A②. The throttle spool (3.1) can be axially adjusted via the spindle (4) for adjustment of the throttling point (1). Simultaneously, the hydraulic fluid in channel A① is directed via the bore (5) to the piston side (6). The active pressure and the spring force retain the throttle spool (3.1) in throttle position.

The hydraulic fluid return flow from actuator B② displaces the throttle spool (3.2) against the spring (7) and enables the unobstructed flow as check valve. Depending on the installation position, the throttling effect may occur in supply or discharge.

Main flow limitation
For actuator velocity adjustment (main flow limitation), the throttle check valve is installed between the directional valve and the subplate.

Pilot flow limitation
With pilot-operated directional valves, the throttle check valve can be applied for switching time adjustment (pilot flow limitation). In this case, it is installed between the pilot control valve and the main valve.

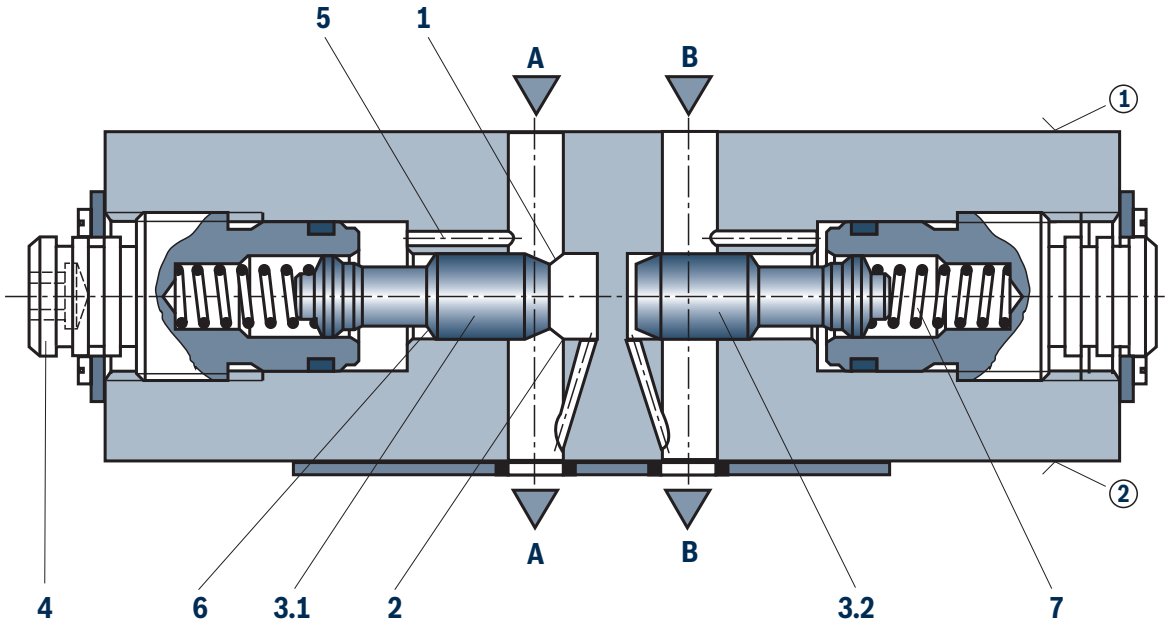

Supply throttling

Technical data
(For applications outside these parameters, please consult us!)

general		
Type of connection		Sandwich plate design
Porting pattern		ISO 4401-05-04-0-05
Weight	kg	Approx. 3.1
Installation position		Any
Ambient temperature range	°C	–20 ... +80 (NBR seals) –15 ... +80 (FKM seals)
$MTTF_D$ values according to EN ISO 13849	years	150 (for more information see data sheet 08012)

hydraulic		
Maximum operating pressure	bar	350
Hydraulic fluid		See table below
Hydraulic fluid temperature range	°C	–20 ... +80 (NBR seals) –15 ... +80 (FKM seals)
Viscosity range	mm^2/s	10 ... 800
Maximum admissible degree of contamination of the hydraulic fluid; cleanliness class according to ISO 4406 (c)		Class 20/18/15 [1]
Maximum flow	l/min	160
Cracking pressure	bar	0.6

Hydraulic fluid		**Classification**	**Suitable sealing materials**	**Standards**	**Data sheet**
Mineral oils		HL, HLP, HLPD, HVLP, HVLPD	NBR, FKM	DIN 51524	90220
Bio-degradable [2]	▶ Insoluble in water	HETG	FKM	ISO 15380	90221
		HEES	FKM		
	▶ Soluble in water	HEPG	FKM	ISO 15380	
Flame-resistant	▶ Water-free	HFDU (glycol base)	FKM	ISO 12922	90222
		HFDU (ester base) [2]	FKM		
		HFDR	FKM		
	▶ Containing water	HFC (Fuchs: Hydrotherm 46M, Renosafe 500; Petrofer: Ultra Safe 620; Hough-ton: Safe 620; Union: Carbide HP5046)	NBR	ISO 12922	90223

☞ **Important information on hydraulic fluids:**
- For further information and data on the use of other hydraulic fluids, please refer to the data sheets above or contact us.
- There may be limitations regarding the technical valve data (temperature, pressure range, life cycle, maintenance intervals, etc.).
- The ignition temperature of the hydraulic fluid used must be 50 K higher than the maximum surface temperature.
- **Bio-degradable and flame-resistant – containing water:**
  If components with galvanic zinc coating (e.g. version „J3“ or „J5“) or parts containing zinc are used, small amounts of dissolved zinc may get into the hydraulic system and cause accelerated aging of the hydraulic fluid. Zinc soap may form as a chemical reaction product, which may clog filters, nozzles and solenoid valves – particularly in connection with local heat input.
- **Flame-resistant – containing water**:
  Due to the increased cavitation tendency with HFC hydraulic fluids, the life cycle of the component may be reduced by up to 30% as compared to the use with mineral oil HLP. In order to reduce the cavitation effect, it is recommended - if possible specific to the installation - to back up the return flow pressure in ports T to approx. 20% of the pressure differential at the component.

[1] The cleanliness classes specified for the components must be adhered to in hydraulic systems. Effective filtration prevents faults and at the same time increases the life cycle of the components.

[2] Not recommended for corrosion-protected version „J3“

Characteristic curves
(measured with HLP46, ϑ_{oil} = 40±5 °C)

Δp-q_V characteristic curves (via check valve)

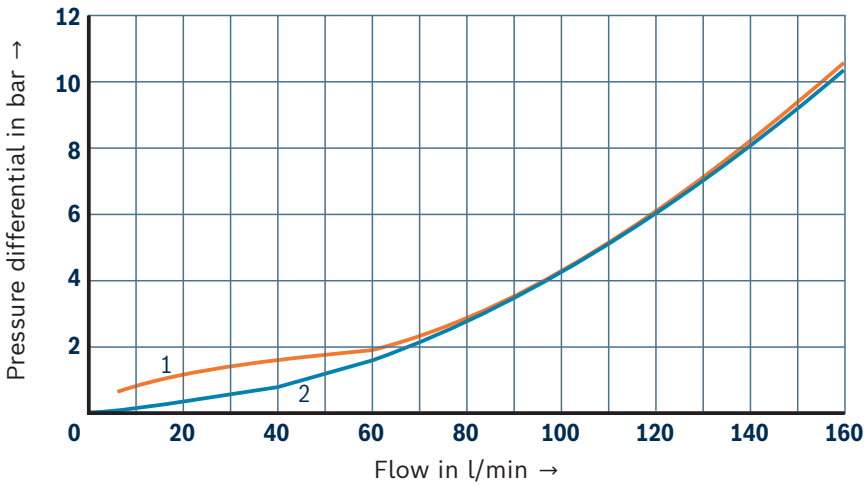

1 Throttle closed
2 Throttle open

Δp-q_V characteristic curves (Throttle position constant)

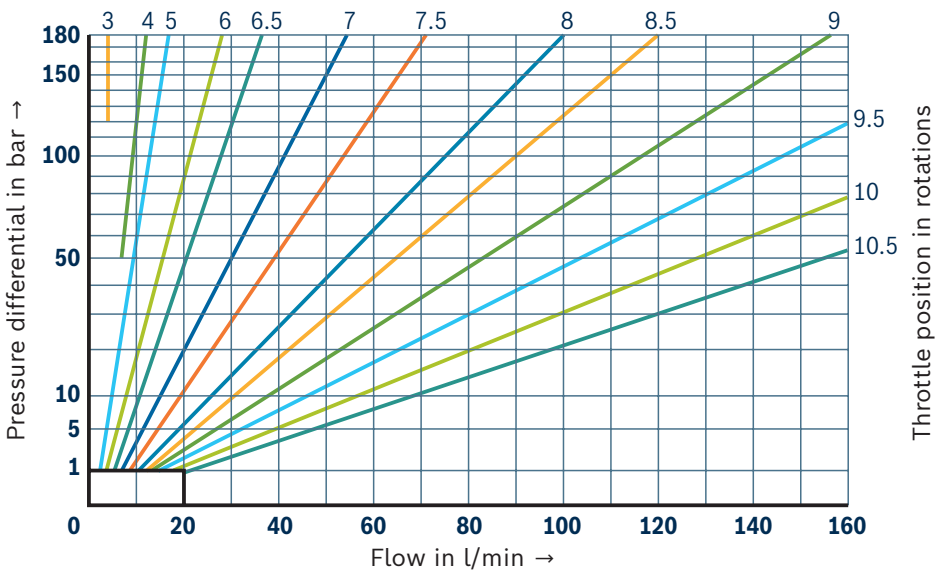

Notes:
- At inlet pressure 200 bar and throttle closed, maximum Leakage 0.12 l/min.
- Typical characteristic curves which are subject to tolerance variations.

Dimensions: Version "A" (dimensions in mm)

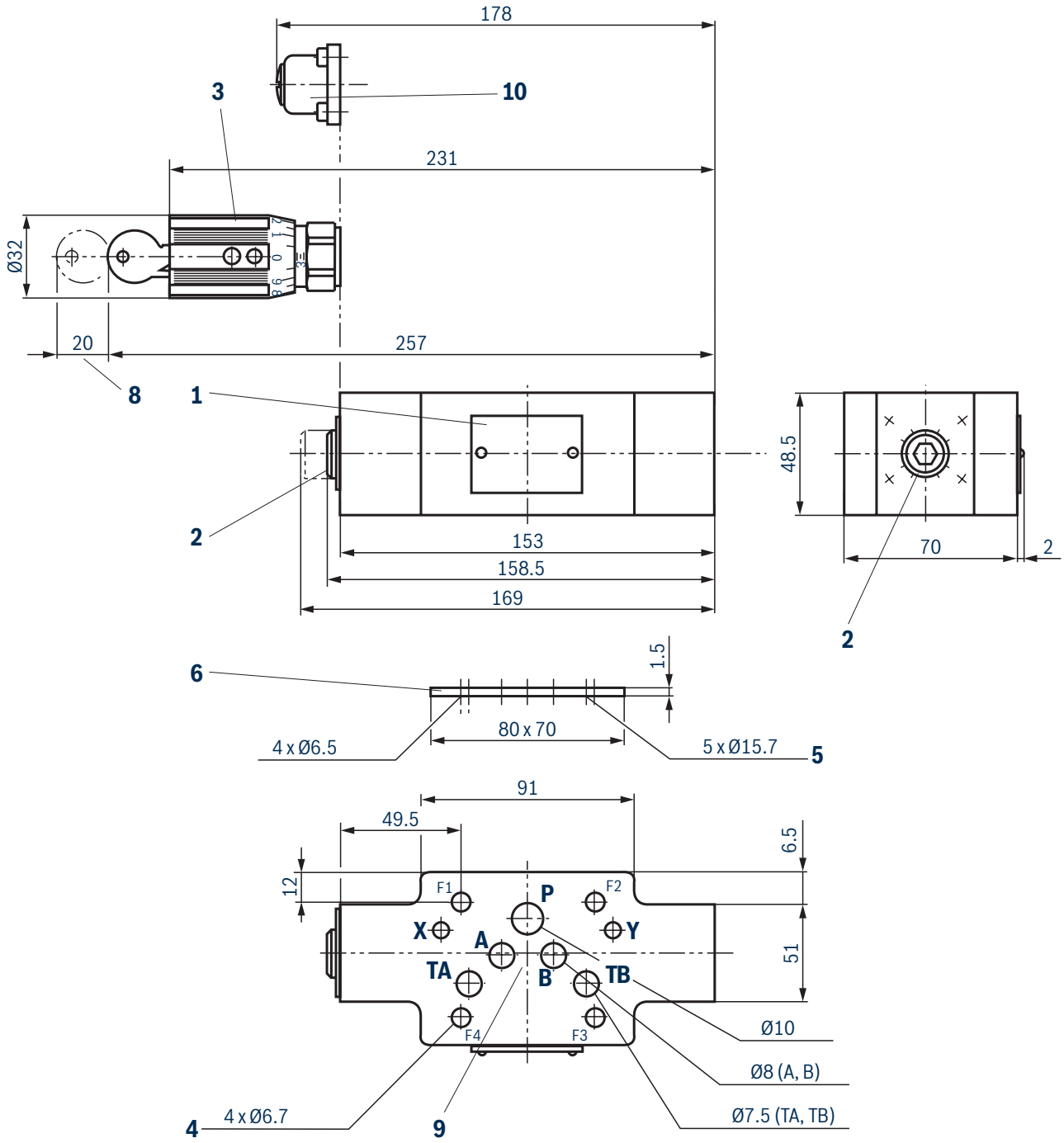

Notes:

- Deviating from ISO 4401, port T is called TA and port T1 is called TB in this data sheet.
- The dimensions are nominal dimensions which are subject to tolerances.
- Version „XY“ is shown. The standard version does not have ports X and Y.

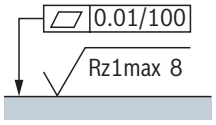

Required surface quality of the valve contact surface

Item explanations and **valve mounting screws**
see page 10.

Dimensions

1. Name plate
2. Adjustment type "5" – spindle for changing the flow cross-section (internal hexagon SW8)
   - ▶ Left rotation = higher flow
   - ▶ Right rotation = lower flow
3. Adjustment type "3"
4. 4 through holes for valve mounting
5. Identical seal rings for ports A, B, P, TA, TB
6. R-ring plate
7. Modification from supply to discharge throttling is realized by rotation of the device around axis "X"–"X" (only with version "–")
8. Space required to remove the key
9. Porting pattern according to ISO 4401-05-04-0-05
10. Version "J3"
    To adjust the valve, disassemble the slotted screw. Further procedure see position 2 (adjustment type "5"). After setting of the valve, assemble the slotted screw.

Valve mounting screws (separate order)
4 hexagon socket head cap screws ISO 4762 - M6 - 10.9

☞ **Notes:**
Length and tightening torque of the valve mounting screws must be calculated according to the components mounted under and over the sandwich plate valve.

Further information

▶ Hydraulic fluids on mineral oil basis	Data sheet 90220
▶ Environmentally compatible hydraulic fluids	Data sheet 90221
▶ Flame-resistant, water-free hydraulic fluids	Data sheet 90222
▶ Flame-resistant hydraulic fluids - containing water (HFAE, HFAS, HFB, HFC)	Data sheet 90223
▶ Reliability characteristics according to EN ISO 13849	Data sheet 08012
▶ Hydraulic valves for industrial applications	Operating instructions 07600-B
▶ Information on available spare parts	www.boschrexroth.com/spc