Bosch Rexroth HM 20-2X/100-H-K35 electronic pressure transducer

Manufacturer: Bosch Rexroth

Manufacturer part number / published order designation: R901342025

Published model: HM 20-2X/100-H-K35

About this compilation

Prepared by Hydmaster from selected manufacturer documentation. Original technical pages follow without cropped drawings, rewritten data or altered units. This cover and index are Hydmaster editorial material, not a manufacturer-issued exact-execution datasheet.

Coverage: selected pages relevant to the identified size and configuration. Other options or neighbouring models retained on an original page apply only where explicitly identified.

Execution notes and conditions

Actual calibration, delivery settings and order availability are not established by the dated technical reference.

Pressure reference type (gauge or absolute) is not assigned without explicit article-specific primary evidence.

Burst and overload pressures are not continuous measurement/operating limits.

Historical manufacturer ordering-table identity omits N; later offered descriptions may append N for the same material number. Actual delivered throttle execution requires confirmation and is not inferred from the old omission.

Source-page index

Source page numbers below are physical pages of each complete original PDF. The original printed page labels and technical content remain unchanged. Compiled page numbers count this cover/index.

Source A: Bosch Rexroth Hm20 Re30272 2018 Rodavigo Original

Original pages	Compiled pages	Relevant content
1-2	2-3	Manufacturer HM20 analog transducer overview and dated edition; Actual range, C/H analog output, K35 and edition-specific throttle key
4-6	4-6	Exact selected range overload/burst columns, supply/load and accuracy conditions; Required technical notes and protection conditions of the selected edition; Actual C/H electrical circuit and male G1/4 dimensions

Pressure transducer for hydraulic applications

Type HM20

RE 30272
Edition: 2018-04
Replaces: 2014-08

H8002

- Component series 2X

CE

c UL US LISTED

DNV·GL
dnvgl.com/af

Features

- Measuring pressures in hydraulic systems
- 8 measurement ranges up to 630 bar
- Sensor with thin film measuring cell
- Components that are in contact with the media are made of stainless steel
- Operational safety due to high bursting pressure, reversed polarity, overvoltage and short-circuit protection
- Accuracy class 0.5
- Excellent non-repeatability < 0.05 %
- Wide operating temperature range –40 ... +85 °C
- Marine approval DNV-GL for all variants with current output

Contents

Features	1
Ordering code	2
Cable sets and mating connectors	3
Technical data	4, 5
Electrical connection	6
Unit dimensions	6

Ordering code

01		02		03		04		05		06
HM20	**–**	**2X**	**/**		**–**		**–**	**K35**	**–**	

01	Pressure transducer	**HM20**
02	Component series 20 to 29 (20 to 29: unchanged installation dimensions and pin assignments)	**2X**
03	10 bar	**10**
	50 bar	**50**
	100 bar	**100**
	160 bar	**160**
	250 bar	**250**
	315 bar	**315**
	400 bar	**400**
	630 bar [1]	**630**
04	Current output 4 to 20 mA [2]	**C**
	Voltage output 0.1 to 10 V	**H**
05	Connector, 4-pole, M12x1	**K35**
06	Without throttle element	**No code**
	Throttle element (corresponds to 0.3 mm nozzle) [3]	**N**

[1] Only available with throttle element
[2] With marine approval DNV-GL
[3] Only available for versions with 250, 315, 400 and 630 bar

Replacement seal ring

Designation	Material no.
Seal ring NBR	**R900012467**

Cable sets or mating connectors are not included in the scope of delivery; please order separately

Technical data

Input variables									
Operating voltage	U_S	18 ... 36 VDC [1]							
Residual ripple	U_{PP}	2.5 V (40 to 400 Hz)							
Current consumption	I_{max}	≤ 12 mA (with voltage output)							
Protection class		III							
Isolation resistance	R	>100 MΩ (500 VDC)							
Measurement range	p_N [bar]	10	50	100	160	250	315	400	630
Overload protection	p_{max} [bar]	25	100	200	320	500	630	800	1000
Bursting pressure	p [bar]	200	200	400	640	1000	1260	1600	2520
Output parameters									
Output signal and admissible load R_A	I_{Sig}	4 ... 20 mA $R_A = (U_S - 8.5\ V) / 0.0215\ A$ with R_A in Ω and U_S in V							
	U_{Sig}	0.1 ... 10 V, R_A > 2 kΩ							
Setting time (10 to 90 %)	t	< 1 ms							
Accuracy (characteristic curve deviation)		< 0.5 % related to the complete measurement range, including non-linearity, hysteresis, zero point and end value deviation (corresponds to the measuring deviation according to IEC 61298-2)							
Temperature coefficient (TC) for zero point and range – within the nominal temperature range – outside of the nominal temperature range		 < 0.1 % / 10 K < 0.2 % / 10 K							
Hysteresis		< 0.15 % [2]							
Non-repeatability		< 0.05 % [2]							
Long-term drift (1 year) under reference conditions		< 0.1 %							
Environmental conditions									
Nominal temperature range	ϑ	–20 ... +80 °C							
Ambient temperature range	ϑ	–40 ... +85 °C							
Storage temperature range	ϑ	–40 ... +100 °C							
Hydraulic fluid temperature range	ϑ	–40 ... +90 °C							
Other characteristics									
Pressure port [3]		G1/4 according to DIN 3852 form E, seal ring according to DIN 3869-14							
Housing material Throttle material Materials in contact with medium		V4A (1.4404), PEI, HNBR 1.4305 1.4542, 1.4305, NBR							
Throttle element		See ordering code (Highly dynamic effects in like pressure peaks or cavitation in hydraulic systems may damage the measuring cell. For these applications, devices with integrated throttle element [version "-N"] in the process interface have to be used) [4]							
Pressure media		HL, HLP, HFC, nitrogen [5], others upon request							
Tightening torque Measurement ranges < 400 bar	M_A	20 ... 25 Nm							
Tightening torque Measurement ranges ≥ 400 bar	M_A	25 ... 30 Nm							
Electrical connection		4-pole M12 connector at the housing [6]							
Protection class according to EN 60529		IP65/IP67 with mating connector correctly mounted and locked							
Weight	m	0.06 kg							
Life cycle		60 million load cycles or 60000 h							
Vibration load: – Transport shock according to DIN EN 60068-2-27 – Sine test according to DIN EN 60068-2-6 – Noise test according to DIN EN 60068-2-64		 15 g / 11 ms / 3 axes 10 ... 2000 Hz / maximum of 10 g / 10 cycles / 3 axes 20 ... 2000 Hz / 14 gRMS / 42 g peak / 24 h / 3 axes							

1) With cULus: max. of 30 VDC is admissible
2) Related to nominal temperature range
3) Thorough bleeding must be ensured
4) Only for device versions with throttle
5) Maximum of 300 bar is admissible
6) Recommendation: Use of shielded connection cable; see "Cable sets and mating connectors"

Technical data

Electro-magnetic compatibility (EMC) EN 61000-6-2 / EN 61326-2-3 – EN 61000-4-2 ESD – EN 61000-4-3 HF radiated – EN 61000-4-4 Burst – EN 61000-4-5 Surge – EN 61000-4-6 HF conducted – EN 61000-4-8 Magnetic field 50/60 Hz – EN 61000-4-9 Impulse magnetic field EN 61000-6-3 / EN 61326-2-3 – EN 55016-2-1 Interference voltage – EN 55016-2-3 Radio interference field strength	 4 kV CD / 8 kV AD with BWK B 10 V/m (80 ... 2700 MHz) with BWK A 2 kV with BWK B 1 kV / 42 Ω with BWK B 10 Veff (150 kHz ... 80 MHz) with BWK A 100 A/m with BWK A 1000 A/m with BWK A 0.15 ... 30 MHz, class A, EN 55022 30 ... 1000 MHz, class B, EN 55022
Conformity	CE according to the EMC directive
Approvals	cULus-listed Marine approval DNV-GL (For marine applications within the scope of marine approval, additional surge protection is required! Based on IACS-Unified Requirements E 10)

Electrical connection

4-pole M12 connector, view to connection side

Voltage		Current (two-wire system)	
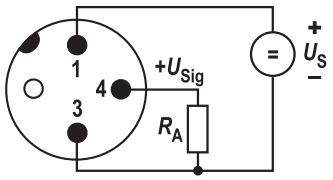	Values for U_S, R_A and U_{Sig}, see page 3	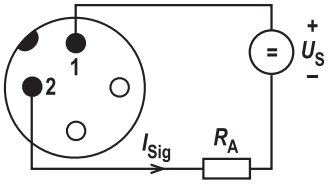	Values for U_S, R_A and I_{Sig}, see page 3

Unit dimensions (dimensions in mm)

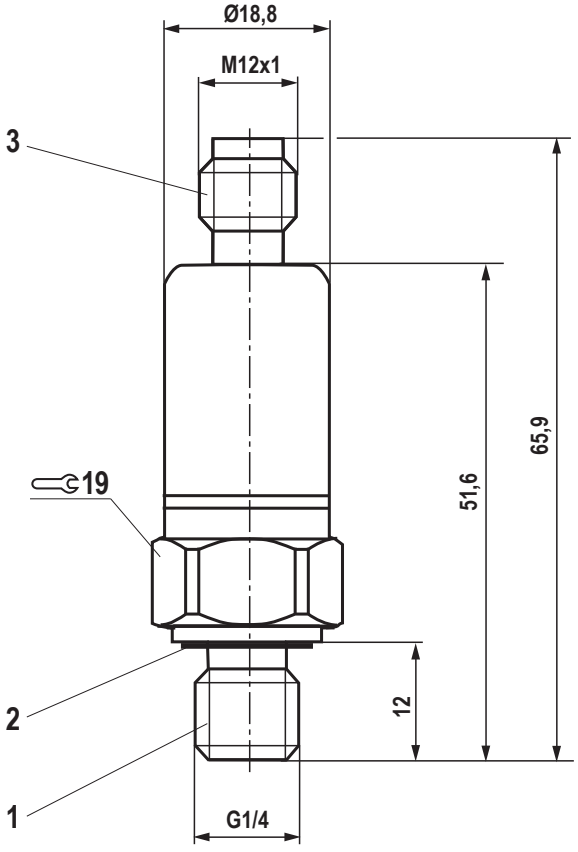

1 Pressure port G1/4 male thread
2 Seal ring
3 4-pole M12 connector

Bosch Rexroth AG
Industrial Hydraulics
Zum Eisengießer 1
97816 Lohr am Main, Germany
Phone +49 (0) 93 52/40 30 20
my.support@boschrexroth.de
www.boschrexroth.de

© All rights reserved to Bosch Rexroth AG, also regarding any disposal, exploitation, reproduction, editing, distribution, as well as in the event of applications for industrial property rights.
The data specified above only serve to describe the product. No statements concerning a certain condition or suitability for a certain application can be derived from our information. The information given does not release the user from the obligation of own judgment and verification.
Please note that our products are subject to a natural process of wear and aging.