Bosch Rexroth AZPF-11-004RRR12MB-S0270 external gear pump

Manufacturer: Bosch Rexroth

Manufacturer part number / published order designation: 0510225010

Published model: AZPF-11-004RRR12MB-S0270

About this compilation

Prepared by Hydmaster from selected manufacturer documentation. Original technical pages follow without cropped drawings, rewritten data or altered units. This cover and index are Hydmaster editorial material, not a manufacturer-issued exact-execution datasheet.

Coverage: selected pages relevant to the identified size and configuration. Other options or neighbouring models retained on an original page apply only where explicitly identified.

Execution notes and conditions

The exact material-number row specifies intermittent pressure p2 = 280 bar and maximum speed 4000 rpm at p2. Intermittent loading is limited to 20 s by the pressure-definition diagram. These values are not continuous-pressure or peak-pressure settings. Minimum speed depends on the actual Series 1X, nominal size 4, pressure band and oil viscosity in the original table. Suction pressure 0.7-3 bar is absolute. Drive only clockwise as viewed on the shaft. Threaded line ports have limited service life when p2 exceeds 210 bar.

Original manufacturer RE10089, edition 2021-11-24. The exact material-number row governs the listed pressure, speed and mass. Other size/configuration panels are contextual.

Source-page index

Source page numbers below are physical pages of each complete original PDF. The original printed page labels and technical content remain unchanged. Compiled page numbers count this cover/index.

Source A: Bosch Rexroth Azpf Re10089 2021 Original

Original pages	Compiled pages	Relevant content
1	2	AZPF manufacturer overview and publication edition
5-6	3-4	Actual Series 1X, size 4, rotation, shaft R and mounting R type-key interfaces; undocumented version/special effects are not decoded; Connection code 12, body/shaft seal key and standard rear cover
9-13	5-9	Actual nominal size 4: displacement, absolute inlet-pressure envelope and viscosity/pressure-dependent minimum-speed table; exact article p2/rpm row takes precedence; Continuous/intermittent/peak pressure definitions, maximum 20 s intermittent loading, ambient and corrosion conditions; Hydraulic-fluid qualification, viscosity limits and separate seal-material temperature conditions; Clockwise rotation viewed on the drive shaft and pressure/suction-port positions; Coupling installation, lubrication and external shaft-load restrictions
15	10	Actual drive-shaft R load/torque interface conditions; alternative shaft panels are contextual
18	11	Original flow curves and 32 mm²/s, 50 °C reference conditions; size 4 panel only
42	12	Literal material-number 0510225010: row-specific p2 280 bar, maximum 4000 rpm and mass 3.15 kg; actual interface drawing with other material-number rows contextual
71	13	Planning/application restrictions and ISO 4406 cleanliness requirements

RE 10089/2021-11-24
Replaces: 2021-03-30

rexroth
A Bosch Company

External gear pump High Performance AZPF

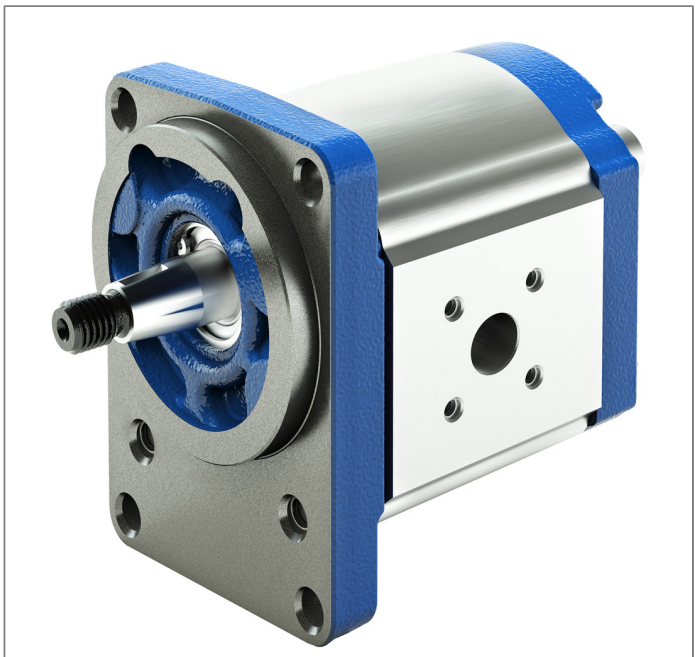

Note: Product photo deviates from delivery condition

- Platform F
- Fixed displacement
- Size 4 ... 28
- Continuous pressure up to 250 bar
- Intermittent pressure up to 280 bar

Features

- Consistent high quality based on large-volume production
- Long service life
- Slide bearings for high loads
- Drive shafts according to ISO or SAE and customer-specific solutions
- Line ports: connection flange or screw thread
- Combination of several pumps possible

Contents

Product description	2
Type codes	5
Technical data	9
Diagrams/characteristic curves	18
Dimensions	24
Project planning information	71
Information	72
Accessories	73

Type codes

Type code single pump

01	02		03	04		05	06	07	08	09	10	11	12	13		14
AZP	**F**	**–**			**–**										**–**	

External gear unit

01	External gear pump	**AZP**

Series

02	High Performance, Platform F	**F**

Unit version

03	Standard bearing	**1**
	Reinforced bearing	**2**

Version

04	Phosphated, pinned	**1**
	Corrosion-protected, pinned[1)]	**2**

Size (NG)

05	Geometric displacement V_g [cm^3], see "Technical data"	**004**	**005**	**008**	**011**	**014**	**016**	**019**	**022**	**025**	**028**

Direction of rotation

06	Viewed on drive shaft	clockwise	**R**
		counter-clockwise	**L**

Drive shaft			**Suitable front cover**	
07	Tapered shaft	1 : 5	B, P, N	**C**
		1 : 5	A, G	**S**
		1 : 8	O	**H**
	Tang drive		M, L, T	**N**
	Splined shaft	SAE J744 16-4 9T	R, C	**R**
		SAE J744 19-4 11T	R, C	**P**
		DIN 5482 B17 × 14	B, P, N, O	**F**
	Parallel keyed shaft	SAE J744 16-1 A	R	**Q**
		ISO Ø18 mm	B	**A**

Front cover

08	Rectangular flange	Ø80 mm		**B**
		Ø36.47 mm		**O**
	2-bolt flange	Ø82.55 mm	SAE J744 82-2 A	**R**
		Ø101.6 mm	SAE J744 101-2 B	**C**
	2-bolt mounting	Ø52 mm	with seal ring	**M**
		Ø52 mm	compressor port	**L**
		Ø50 mm	connection variant N	**N**
		Ø50 mm	connection variant P	**P**
	4-bolt mounting	Ø52 mm	with seal ring	**T**
	Outrigger bearing	Ø80 mm	type 1	**A**
			type 2	**G**

[1)] Corrosion-protected version, details see "Technical data“

01	02		03	04		05	06	07	08	09	10	11	12	13		14
AZP	**F**	–			–										–	

Line connection

		004	005	008	011	014	016	019	022	025	028	
09	Pipe thread according to ISO 228-1	●	●	●	●	●	●	●	●	●	●	**01**
	Metric thread according to ISO 6149, O-ring	●	●	●	●	●	●	●	●	●	●	**50**
	UN-thread according to ISO 11926-1 / ASME B 1.1, O-ring	●	●	●	●	●	●	●	●	●	●	**12**
	Square flange	●	●	●	●	●	●	●	●	●	●	**20**
	Square flange	●	●	●	●	●	●	●	●	●	●	**30**

Sealing material

10	NBR (nitrile rubber)	**M**
	FKM (fluoroelastomer)	**P**
	NBR (nitrile rubber), shaft seal in FKM (fluoroelastomer)	**K**

Rear cover

11	Without valve (standard)			**B**
	With pressure relief valve	Pressure discharge	external	**T**
			internal	**D**
	With flow control valve	Residual flow	external	**E**
			internal	**S**
	With flow control valve and pressure relief valve			**V**

Valve setting pressure relief valve (parameter only required for rear cover with pressure relief valve)

12	Without pressure relief valve	**XXX**
	Cracking pressure in bar, 3-digit, e.g. 180 bar	**180**

Valve setting flow control valve (parameter only required for rear cover with flow control valve)

13	Without flow control valve	**XX**
	Flow in l/min, 2-digit, e.g. 9 l/min	**09**

Special version

14	Special version[1)]	**SXXXX**

● = Available – = Not Available

[1)] or further information on special versions, please contact us.

Note

- Not all of the variants according to the type code are possible.
- Please select the desired pump with the help of the selection table (preferred types) or after consultation with Bosch Rexroth.
- Special options are available on request.

Technical data

Table of values

Size					**4**	**5**	**8**	**11**	**14**	**16**	**19**	**22**
Series					Series 1x							
Displacement geometric, per revolution			V_g	cm³	4	5,5	8	11	14	16	19	22,5
Pressure at suction port S [1]		absolute	p_e	bar	0,7 ... 3							
Maximum continuous pressure			p_1	bar	250	250	250	250	250	250	210	180
Maximum intermittent pressure [2]			p_2	bar	280	280	280	280	280	280	230	210
Maximum pressure peaks			p_3	bar	300	300	300	300	300	300	250	230
Minimum speed at	ν = 12 mm²/s	p < 100 bar	n_{min}	rpm	600	500	500	500	500	500	500	500
		p = 100 ... 180 bar	n_{min}	rpm	1200	1200	1000	1000	800	800	800	800
		p = 180 bar ... p_2	n_{min}	rpm	1400	1400	1400	1200	1000	1000	1000	1000
	ν = 25 mm²/s	at p_2	n_{min}	rpm	700	700	700	600	500	500	500	500
Maximum speed		at p_2	n_{max}	rpm	4000	4000	4000	3500	3000	3000	3000	2500

Size					**4**	**5**	**8**	**11**	**14**	**16**	**19**	**22**
Series					Series 2x							
Displacement geometric, per revolution			V_g	cm³	4	5,5	8	11	14	16	19	22,5
Pressure at suction port S [1]		absolute	p_e	bar	0,7 ... 3							
Maximum continuous pressure			p_1	bar	250	250	250	250	250	250	250	220
Maximum intermittent pressure [2]			p_2	bar	280	280	280	280	280	280	280	250
Maximum pressure peaks			p_3	bar	300	300	300	300	300	300	300	290
Minimum speed at	ν = 12 mm²/s	p < 100 bar	n_{min}	rpm	600	500	500	500	500	500	500	500
		p = 100 ... 180 bar	n_{min}	rpm	1200	1200	1000	1000	800	800	800	800
		p = 180 bar ... p_2	n_{min}	rpm	1400	1400	1400	1200	1000	1000	1000	1000
	ν = 25 mm²/s	at p_2	n_{min}	rpm	700	700	700	600	500	500	500	500
Maximum speed		at p_2	n_{max}	rpm	4000	4000	4000	3500	3000	3000	3500	3500

Size					**25**	**28**
Series					Series 2x	
Displacement geometric, per revolution			V_g	cm³	25	28
Pressure at suction port S [1]		absolute	p_e	bar	0,7 ... 3	
Maximum continuous pressure			p_1	bar	195	170
Maximum intermittent pressure [2]			p_2	bar	225	200
Maximum pressure peaks			p_3	bar	265	240
Minimum speed at	ν = 12 mm²/s	p < 100 bar	n_{min}	rpm	500	500
		p = 100 ... 180 bar	n_{min}	rpm	800	800
		p = 180 bar ... p_2	n_{min}	rpm	1000	1000
	ν = 25 mm²/s	at p_2	n_{min}	rpm	500	500
Maximum speed		at p_2	n_{max}	rpm	3000	3000

[1] In the case of tandem pumps, the suction-side pressure difference between the individual pump stages must not exceed 0.5 bar.
[2] Limited service life with threaded line ports and p_2 > 210 bar

General technical data

Weight	m	kg	See chapter Dimensions
Installation position			No restrictions
Mounting type			Flange or through-bolting with spigot
Line connections			See chapter Dimensions
Direction of rotation, viewed on drive shaft			Clockwise or counter-clockwise, the pump may only be driven in the direction indicated
Drive shaft loading			Axial and radial forces only after consultation
Ambient temperature range	t	°C	-30 to +80 with NBR seals (NBR = nitrile rubber)
			-20 to +110 with FKM seals (FKM = fluoroelastomer)

Corrosion protection

Version 1 (phosphated): Unit with low corrosion protection	The surface serves for protection against flash rust during transport or as priming for painting.	
Version 2 (galvanized, passivated): Unit with corrosion protection	Degree of corrosion and rust according to DIN EN ISO 9227	Test duration 96 h: no red rust

Note

- Safety requirements pertaining to the whole systems are to be observed.
- Please contact us for applications with frequent load changes.

Pressure definition

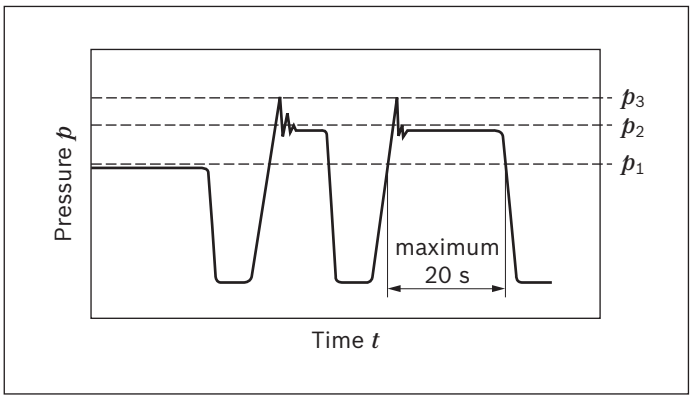

p_1: Continuous pressure max.
p_2: Intermittent pressure max.
p_3: Pressure peaks max.

Determining the operating characteristics		
Flow	$q_v = \frac{V_g \times n \times \eta_v}{1000}$	[l/min]
Torque	$M = \frac{V_g \times \Delta p}{20 \times \pi \times \eta_{hm}}$	[Nm]
Power	$P = \frac{2 \pi \times M \times n}{60000} = \frac{q_v \times \Delta p}{600 \times \eta_t}$	[kW]

Key

V_g	Displacement per revolution [cm³]
Δp	Differential pressure [bar]
n	Rotational speed [rpm]
η_v	Volumetric efficiency
η_{hm}	Hydraulic-mechanical efficiency
η_t	Total efficiency ($\eta_t = \eta_v \cdot \eta_{hm}$)

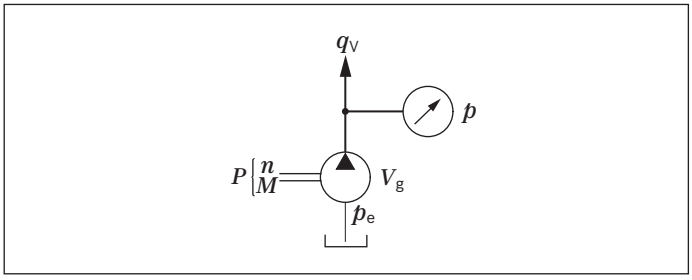

Note

- You can find diagrams for a rough calculation in chapter "Diagrams / Characteristic curves"..

Hydraulic fluids

The external gear unit is designed for operation with HLP mineral oil according to DIN 51524, 1-3. Under higher load, however, Bosch Rexroth recommends at least HLP compliant with DIN 51524 Part 2.
See the following data sheet for application instructions and requirements for selecting hydraulic fluid, behavior during operation as well as disposal and environmental protection before you begin project planning:

- 90220: Hydraulic fluids based on mineral oils and related hydrocarbons

Other hydraulic fluids on request.

Selection of hydraulic fluid
Bosch Rexroth evaluates hydraulic fluids on the basis of the Fluid Rating according to the technical data sheet 90235.
Hydraulic fluids with positive evaluation in the Fluid Rating are provided in the following technical data sheet:

- 90245: Bosch Rexroth Fluid Rating List for Rexroth hydraulic components (pumps and motors)

The hydraulic fluid should be selected so that the operating viscosity in the operating temperature range is within the optimum range (ν_{opt}; see selection diagram).

Viscosity and temperature of hydraulic fluids

Viscosity range	
Permissible in continuous operation	ν = 12 ... 800 mm²/s
Recommended in continuous operation	ν_{opt} = 20 ... 100 mm²/s
Permissible for cold start	ν_{max} ≤ 2000 mm²/s
Temperature range	
With NBR seals (NBR = nitrile rubber)	t = -30 °C ... +80 °C
With FKM seals (FKM = fluoroelastomer)	t = -20 °C ... +110 °C

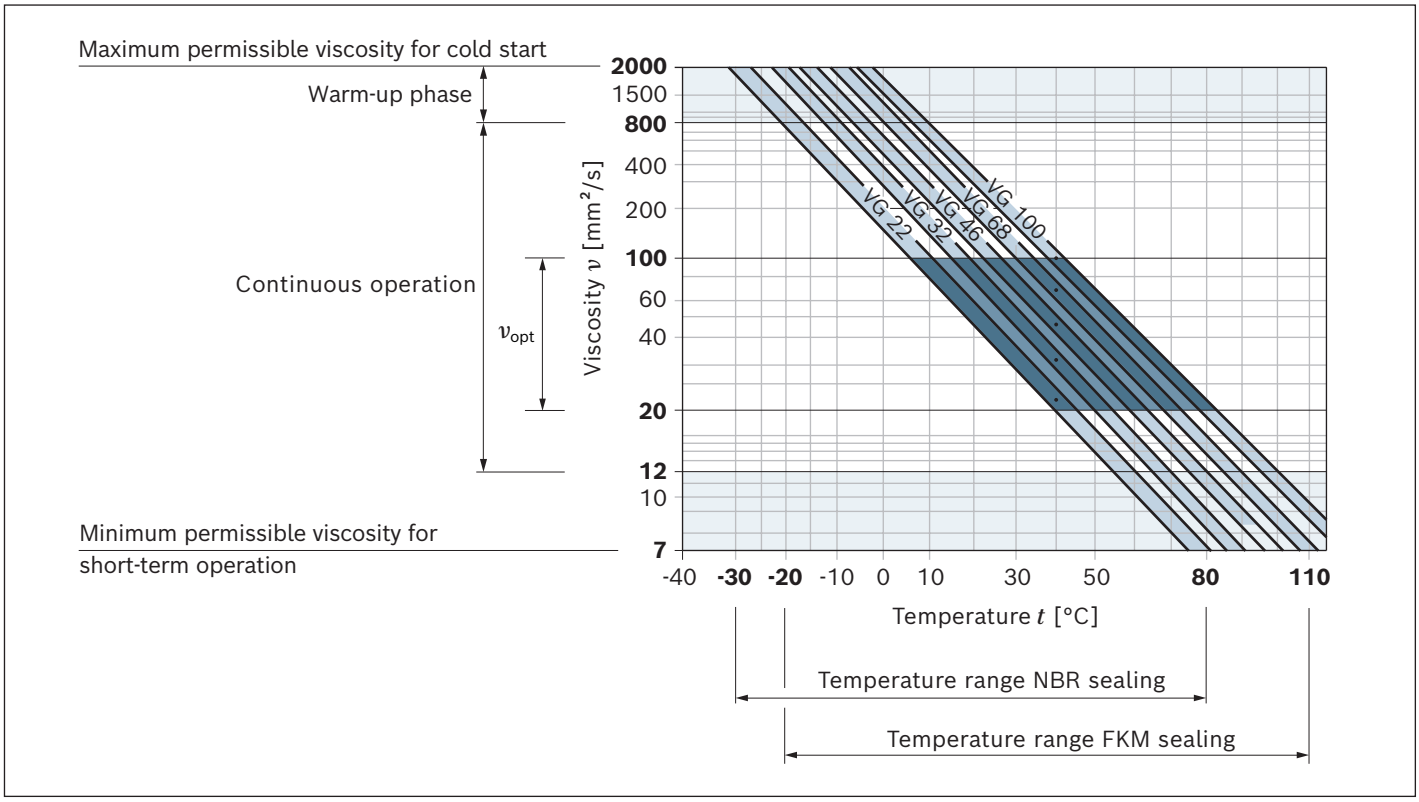

Observe the instructions for the filtration of the hydraulic fluid (see chapter Project planning information).

Direction of rotation

The dimensional drawings in the chapter Dimensions represent pumps for clockwise rotation. The position of the drive shaft or the position of suction and pressure port changes for counter-clockwise rotation.

Direction of rotation, viewed on drive shaft

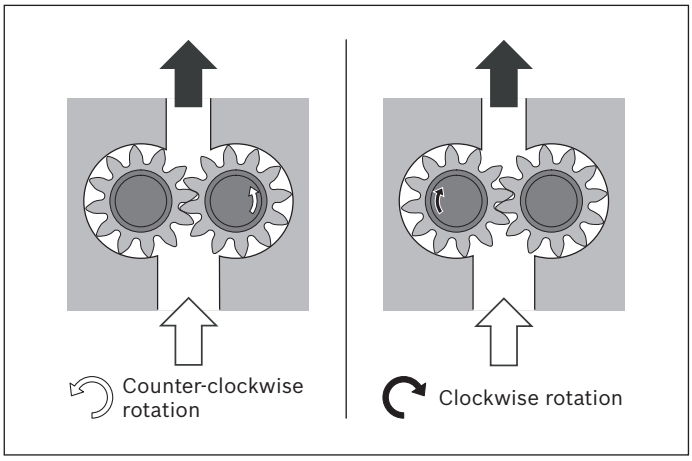

Drives

1. Elastic couplings

- The coupling must not transfer any radial and axial forces onto the pump.
- The maximum admissible radial run-out deviation from the shaft to the fitting slot is 0.2 mm.
- Admissible shaft shifting see installation information of the coupling manufacturers.

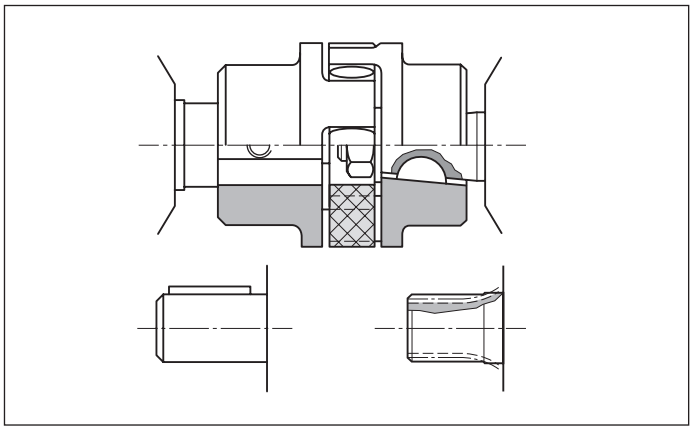

2. Coupling sleeve

- To be used on splined shaft profile according to DIN and SAE.
- Attention: No radial or axial forces are permitted on the pump shaft or coupling sleeve. The coupling sleeve must be free to move axially.
- The distance between the pump drive shaft and drive shaft on the customer side must 2^{+1} mm.
- Provide installation space for the snap ring.
- Oil-bath or oil-mist lubrication is required.

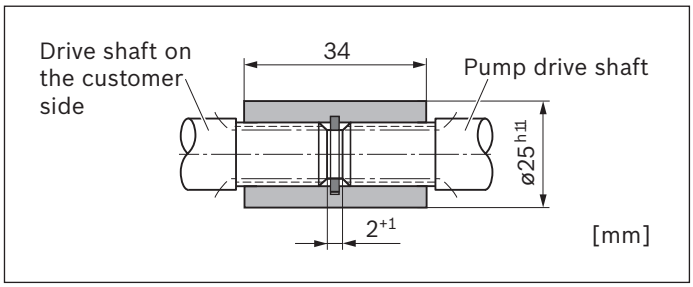

3. Tang drive coupling

- For attaching the pump directly to an electric motor or combustion engine, gear, etc.
- The pump shaft has a special tang drive and driver (**3**) (scope of delivery see offer drawing)
- There is no shaft sealing
- Drive-side installation and sealing according to the following recommendations and dimensions
- Drive shaft on the customer side (**1**)
  - Case-hardening steel DIN EN 10084 e.g. 20MnCrS5 case-hardened 0.6 mm deep; HRC $60^{\pm 3}$
  - Seal ring running surface ground without rifling $R_t \leq 4$ µm
- Radial shaft seals on the customer side (**2**)
  - Provide with rubber cover (see DIN 3760, type AS or double-lipped ring)
  - Provide installation edge with 15° slant or install shaft seal with protection sleeve

AZPF-1x

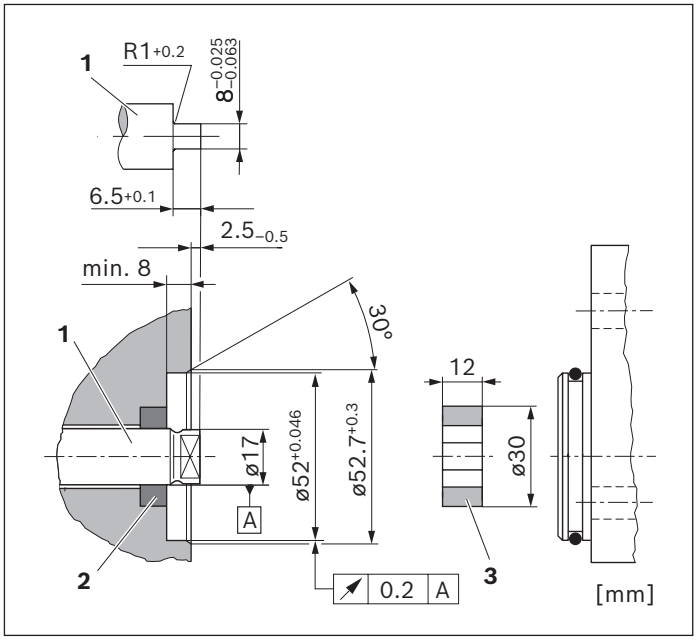

AZPF-2x

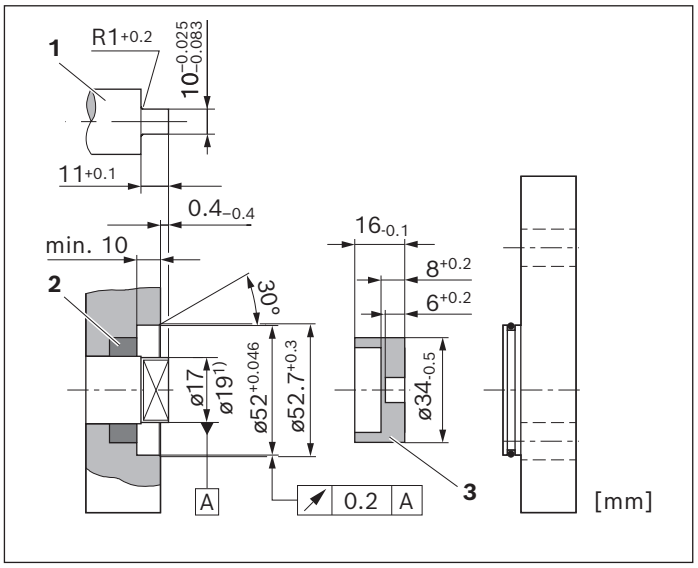

1) See offer drawing

Maximum transferable drive torques

Splined shafts

Drive shaft		M_{max}	Size	$p_{2\ max}$ Serie 1x	$p_{2\ max}$ Serie 2x
Code	**Designation**	**Nm**		**bar**	**bar**
F	DIN 5482 B17 × 14	100	4 ... 16	280	280
			19	230	
			22	210	250
			25	-	225
			28	-	200
R	SAE J744 16-4 9T	110	4 ... 16	280	280
			19	230	
			22	210	250
			25	-	225
			28	-	200
P	SAE J744 19-4 11T	180	4 ... 16	280	280
			19	230	
			22	210	250
			25	-	225
			28	-	200

Tapered shafts

Drive shaft		M_{max}	Size	$p_{2\ max}$ Serie 1x	$p_{2\ max}$ Serie 2x
Code	**Type**	**Nm**		**bar**	**bar**
C	1 : 5	155	4 ... 16	280	280
			19	230	
			22	210	250
			25	-	225
			28	-	200
H	1 : 8	160	4 ... 16	280	280
			19	230	
			22	210	250
			25	-	225
			28	-	200

Diagrams/characteristic curves

Flow characteristic curves

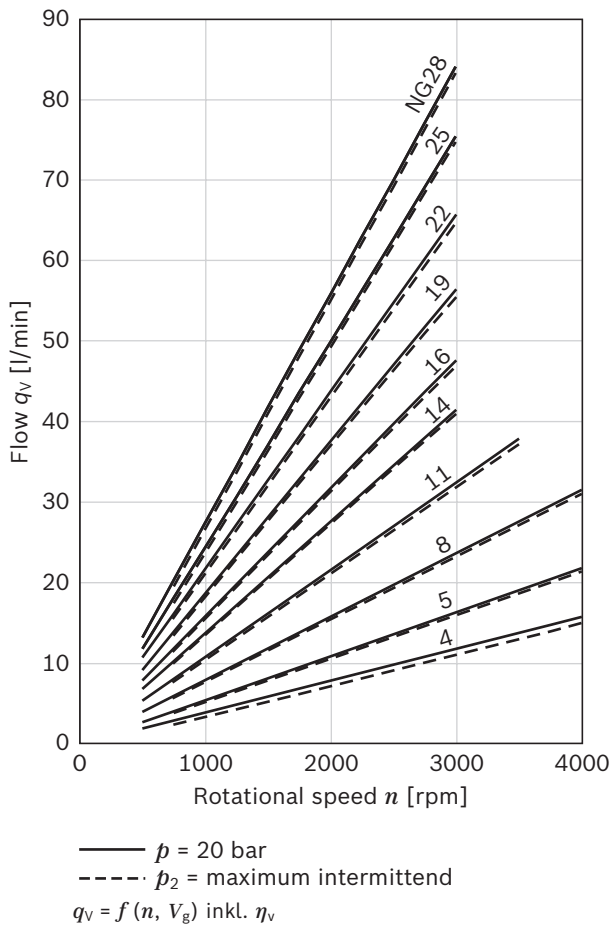

Note

- Characteristic curves measured at ν = 32 mm²/s and t = 50 °C.

Power diagrams

Size 4

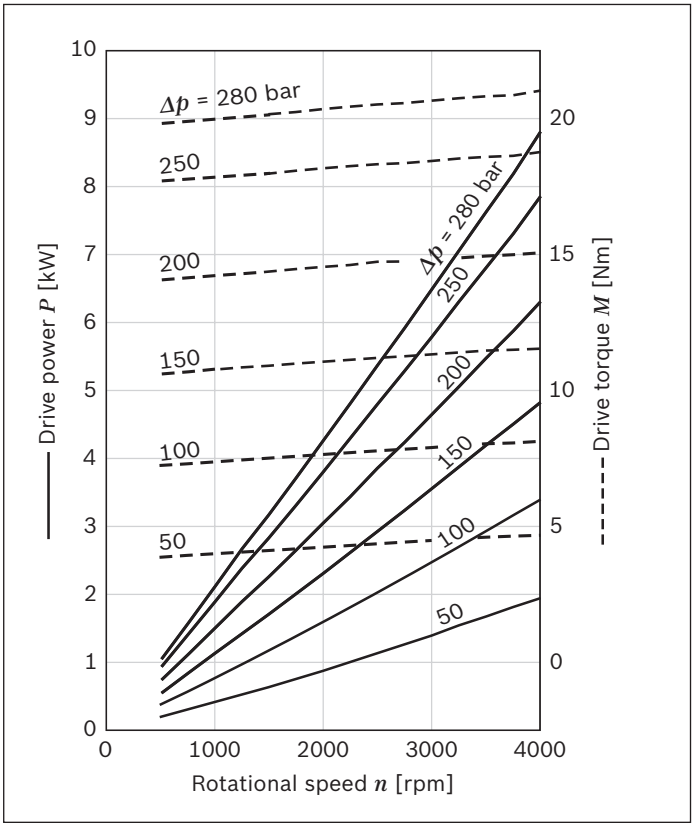

Size 5

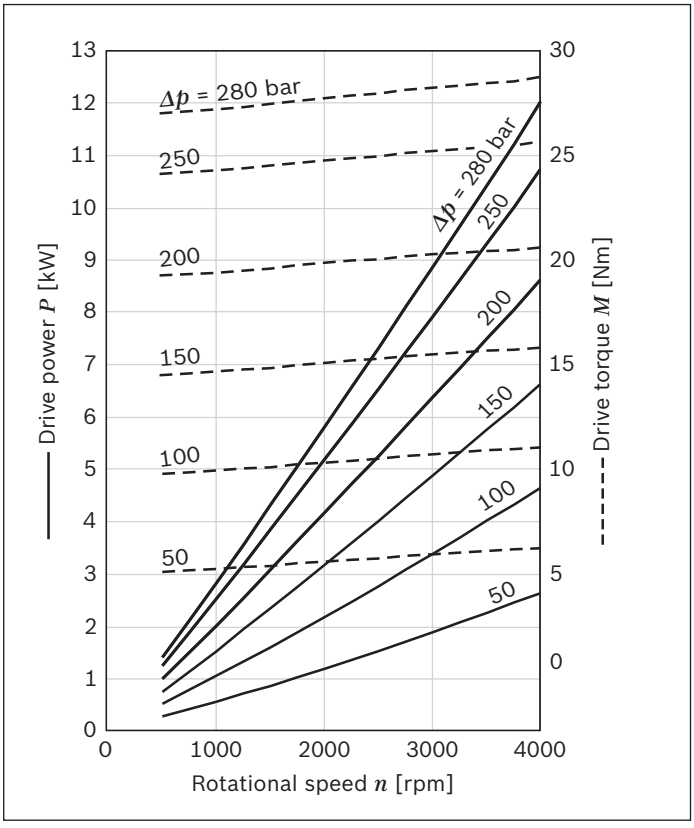

Splined shaft (SAE J744 16-4 9T) with 2-bolt flange Ø82.55 mm, SAE J744 82-2 (A)

AZPF – 1X – ... **RR12**MB

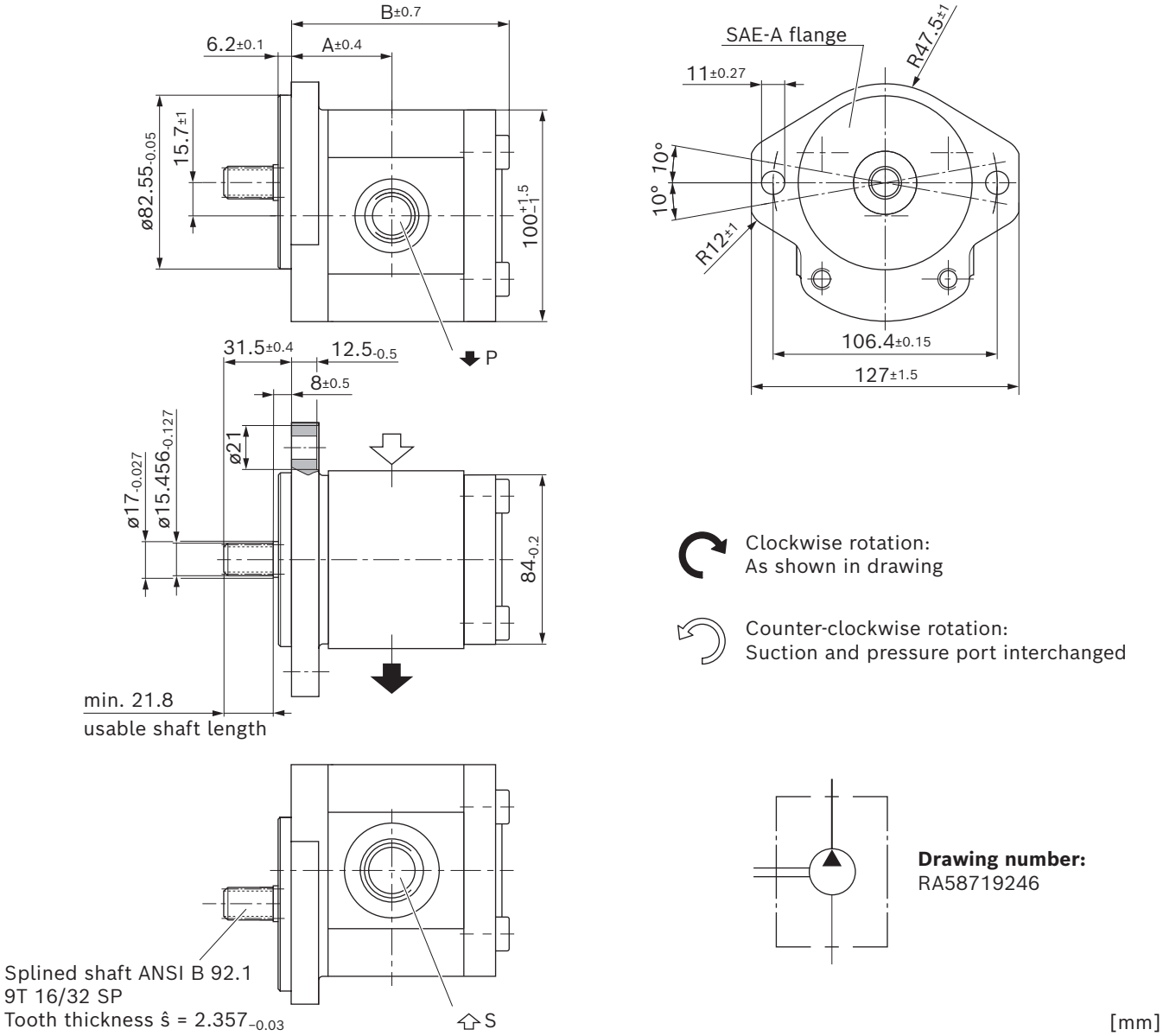

NG	Material number		Max. pressure intermittend	Maximum speed	Weight	Dimensions			
	Direction of rotation		p_2	n_{max}	m	A	B	S	P
	counter-clockwise	clockwise	bar	rpm	kg	mm	mm		
4		0 510 225 010 [2]	280	4000	3,15	39,9	82,7	9/16-18 UNF-2B; 13 mm deep	9/16-18 UNF-2B; 13 mm deep
5		0 510 325 010 [2]	280	4000	3,2	41,4	85,2		
8		0 510 425 015 [1]	280	4000	3,3	43,2	91,1	7/8-14 UNF-2B; 16 mm deep	7/8-14 UNF-2B; 16 mm deep
11	0 510 525 315	0 510 525 014	280	3500	3,4	47	96,1	1 1/16-12 UN-2B; 19 mm deep	
14		0 510 525 041	280	3000	3,5	47,5	101,1		
16		0 510 625 020 [1]	280	3000	3,75	47,5	104,5		
19	0 510 625 346 [1]	0 510 625 048 [1]	230	3000	3,9	47,5	109,5		
22		0 510 725 063 [1]	210	2500	4	55,1	114,9		

[1] Special version S0040
[2] Special version S0270

Project planning information

Technical data

All mentioned technical data are dependent on manufacturing tolerances and are applicable for certain boundary conditions.
Note that certain deviations are therefore possible and that technical data may vary when certain boundary conditions (e.g., viscosity) change.
Pumps delivered by Bosch Rexroth are tested for function and performance.
The pump may only be operated with the permissible data (see chapter "Technical data").

Characteristic curves
When dimensioning the gear pump, observe the maximum possible application data on the basis of the characteristic curves shown.

Application information

External gear units are not approved in on-highway vehicles for safety-relevant functions, as well as functions in the drive train, for steering, braking and level regulation. Classified as on-highway vehicles are e.g. vehicles such as motorbikes, private cars, trucks, vans, freight cars, buses and trailers. The European vehicle classes L (motorbikes), M (private cars), N (vehicles for transporting goods such as trucks and vans) and O (trailers and semi-trailers) serve as reference.

Filtration of the hydraulic fluid

Since the majority of premature failures in gear pumps occur due to contaminated hydraulic fluid, filtration should maintain a cleanliness level of 20/18/15 as defined by ISO 4406. Thus contamination can be reduced to an acceptable degree in terms of particle size and concentration.
Bosch Rexroth generally recommends full-flow filtration.
The basic contamination of the hydraulic fluid filled in should not exceed class 20/18/15 as defined by ISO 4406. New fluids are often above this value. In such instances, a filling device with a special filter should be used.
Bosch Rexroth is not liable for wear due to contamination.
For hydraulic systems or devices with function-related, critical failure effects, such as steering and brake valves, the type of filtration selected must be adapted to the sensitivity of these devices.

Notice
- When used as an auxiliary steering pump, the vehicle manufacturer should make sure that the steering system continues to operate safely as per ECE R-79 even if the auxiliary steering pump fails.

Further information

Installation drawings and dimensions are valid at date of publication, subject to modifications.
Further information and notes on project planning can be found in the “General Operating Instructions for External Gear Units” (07012-B, chapter 5.5).