# Bosch Rexroth AZPF-11-004RCN20MB external gear pump

Manufacturer: Bosch Rexroth

Manufacturer part number / published order designation: 0510215006

Published model: AZPF-11-004RCN20MB

## About this compilation

Prepared by Hydmaster from selected manufacturer documentation. Original technical pages follow without cropped drawings, rewritten data or altered units. This cover and index are Hydmaster editorial material, not a manufacturer-issued exact-execution datasheet.

Coverage: selected pages relevant to the identified size and configuration. Other options or neighbouring models retained on an original page apply only where explicitly identified.

## Execution notes and conditions

At viscosity 12 mm²/s: minimum 600 rpm below 100 bar, 1200 rpm at 100-180 bar, and 1400 rpm from 180 bar to p2. At viscosity 25 mm²/s and pressure p2: minimum 700 rpm. Maximum 4000 rpm applies at p2.

NBR seal-specific fluid and ambient range applies only with the stated viscosity and hydraulic-fluid conditions.

Use the exact square-flange connection drawing and the indicated rotation.

## Source-page index

Source page numbers below are physical pages of each complete original PDF. The original printed page labels and technical content remain unchanged. Compiled page numbers count this cover/index.

## Source A: Bosch Rexroth Azpf Re10089 2021 Original


| Original pages | Compiled pages | Relevant content |
|---|---|---|
| 1 | 2 | AZPF manufacturer series overview and publication edition |
| 5-6 | 3-4 | Exact single-pump key: Series 1X, size 4, rotation, shaft and mounting flange; Actual connection code 20, body and shaft seal execution, and standard valve-free rear cover |
| 9-13 | 5-9 | Series 1X, size 4: displacement, distinct pressure limits, suction absolute pressure and viscosity-dependent speed rows; Continuous, intermittent and peak pressure definition, maximum 20 s intermittent loading, seal-specific ambient limits and corrosion versions; Mineral-oil qualification, viscosity limits and seal-specific fluid-temperature conditions; Clockwise rotation viewed on drive shaft and effect on pressure/suction-port positions; Applicable coupling installation, shaft loading and spline lubrication conditions |
| 15 | 10 | Actual shaft C drive-torque and size-dependent pressure interface limits; other shaft panels are contextual |
| 18 | 11 | Flow curves for size 4 and original 32 mm²/s, 50 °C measurement conditions; size 4/5 power panels apply only where relevant |
| 24 | 12 | Actual shaft C profile, retaining details and mounting-flange-dependent shaft length; other shaft panels are contextual |
| 27-28 | 13-14 | Actual 50 mm two-bolt flange variant N; alternative mounting panels are contextual; Connection code 20 definitions; the exact material-number installation drawing takes precedence over generic port tables |
| 36 | 15 | Exact material-number 0510215006, size 4, clockwise execution: preferred row, shaft/flange/ports, weight, intermittent pressure and maximum speed |
| 71 | 16 | Planning, application restrictions and ISO 4406 class 20/18/15 filtration requirements |

RE 10089/2021-11-24
Replaces: 2021-03-30

rexroth
A Bosch Company

# External gear pump High Performance AZPF

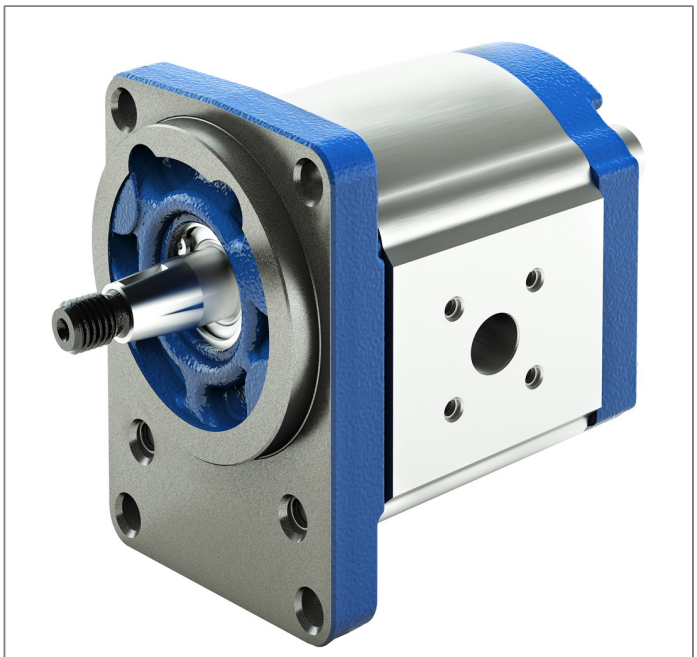

Note: Product photo deviates from delivery condition

- Platform F
- Fixed displacement
- Size 4 ... 28
- Continuous pressure up to 250 bar
- Intermittent pressure up to 280 bar

**Features**

- Consistent high quality based on large-volume production
- Long service life
- Slide bearings for high loads
- Drive shafts according to ISO or SAE and customer-specific solutions
- Line ports: connection flange or screw thread
- Combination of several pumps possible

**Contents**

| | |
|---|---|
| Product description | 2 |
| Type codes | 5 |
| Technical data | 9 |
| Diagrams/characteristic curves | 18 |
| Dimensions | 24 |
| Project planning information | 71 |
| Information | 72 |
| Accessories | 73 |

# Type codes

## Type code single pump

| 01 | 02 | | 03 | 04 | | 05 | 06 | 07 | 08 | 09 | 10 | 11 | 12 | 13 | | 14 |
|---|---|---|---|---|---|---|---|---|---|---|---|---|---|---|---|---|
| **AZP** | **F** | **–** | | | **–** | | | | | | | | | | **–** | |

**External gear unit**

| | | |
|---|---|---|
| 01 | External gear pump | **AZP** |

**Series**

| | | |
|---|---|---|
| 02 | High Performance, Platform F | **F** |

**Unit version**

| | | |
|---|---|---|
| 03 | Standard bearing | **1** |
| | Reinforced bearing | **2** |

**Version**

| | | |
|---|---|---|
| 04 | Phosphated, pinned | **1** |
| | Corrosion-protected, pinned[1)] | **2** |

**Size (NG)**

| | | | | | | | | | | | |
|---|---|---|---|---|---|---|---|---|---|---|---|
| 05 | Geometric displacement $V_g$ [cm$^3$], see "Technical data" | **004** | **005** | **008** | **011** | **014** | **016** | **019** | **022** | **025** | **028** |

**Direction of rotation**

| | | | |
|---|---|---|---|
| 06 | Viewed on drive shaft | clockwise | **R** |
| | | counter-clockwise | **L** |

| **Drive shaft** | | | **Suitable front cover** | |
|---|---|---|---|---|
| 07 | Tapered shaft | 1 : 5 | B, P, N | **C** |
| | | 1 : 5 | A, G | **S** |
| | | 1 : 8 | O | **H** |
| | Tang drive | | M, L, T | **N** |
| | Splined shaft | SAE J744 16-4 9T | R, C | **R** |
| | | SAE J744 19-4 11T | R, C | **P** |
| | | DIN 5482 B17 × 14 | B, P, N, O | **F** |
| | Parallel keyed shaft | SAE J744 16-1 A | R | **Q** |
| | | ISO Ø18 mm | B | **A** |

**Front cover**

| | | | | |
|---|---|---|---|---|
| 08 | Rectangular flange | Ø80 mm | | **B** |
| | | Ø36.47 mm | | **O** |
| | 2-bolt flange | Ø82.55 mm | SAE J744 82-2 A | **R** |
| | | Ø101.6 mm | SAE J744 101-2 B | **C** |
| | 2-bolt mounting | Ø52 mm | with seal ring | **M** |
| | | Ø52 mm | compressor port | **L** |
| | | Ø50 mm | connection variant N | **N** |
| | | Ø50 mm | connection variant P | **P** |
| | 4-bolt mounting | Ø52 mm | with seal ring | **T** |
| | Outrigger bearing | Ø80 mm | type 1 | **A** |
| | | | type 2 | **G** |

[1)] Corrosion-protected version, details see "Technical data“

| 01 | 02 | | 03 | 04 | | 05 | 06 | 07 | 08 | 09 | 10 | 11 | 12 | 13 | | 14 |
|---|---|---|---|---|---|---|---|---|---|---|---|---|---|---|---|---|
| **AZP** | **F** | – | | | – | | | | | | | | | | – | |

**Line connection**

| | | 004 | 005 | 008 | 011 | 014 | 016 | 019 | 022 | 025 | 028 | |
|---|---|---|---|---|---|---|---|---|---|---|---|---|
| 09 | Pipe thread according to ISO 228-1 | ● | ● | ● | ● | ● | ● | ● | ● | ● | ● | **01** |
| | Metric thread according to ISO 6149, O-ring | ● | ● | ● | ● | ● | ● | ● | ● | ● | ● | **50** |
| | UN-thread according to ISO 11926-1 / ASME B 1.1, O-ring | ● | ● | ● | ● | ● | ● | ● | ● | ● | ● | **12** |
| | Square flange | ● | ● | ● | ● | ● | ● | ● | ● | ● | ● | **20** |
| | Square flange | ● | ● | ● | ● | ● | ● | ● | ● | ● | ● | **30** |

**Sealing material**

| | | |
|---|---|---|
| 10 | NBR (nitrile rubber) | **M** |
| | FKM (fluoroelastomer) | **P** |
| | NBR (nitrile rubber), shaft seal in FKM (fluoroelastomer) | **K** |

**Rear cover**

| | | | | |
|---|---|---|---|---|
| 11 | Without valve (standard) | | | **B** |
| | With pressure relief valve | Pressure discharge | external | **T** |
| | | | internal | **D** |
| | With flow control valve | Residual flow | external | **E** |
| | | | internal | **S** |
| | With flow control valve and pressure relief valve | | | **V** |

**Valve setting pressure relief valve** (parameter only required for rear cover with pressure relief valve)

| | | |
|---|---|---|
| 12 | Without pressure relief valve | **XXX** |
| | Cracking pressure in bar, 3-digit, e.g. 180 bar | **180** |

**Valve setting flow control valve** (parameter only required for rear cover with flow control valve)

| | | |
|---|---|---|
| 13 | Without flow control valve | **XX** |
| | Flow in l/min, 2-digit, e.g. 9 l/min | **09** |

**Special version**

| | | |
|---|---|---|
| 14 | Special version[1)] | **SXXXX** |

● = Available – = Not Available

[1)] or further information on special versions, please contact us.

**Note**

- Not all of the variants according to the type code are possible.
- Please select the desired pump with the help of the selection table (preferred types) or after consultation with Bosch Rexroth.
- Special options are available on request.

# Technical data

## Table of values

| **Size** | | | | | **4** | **5** | **8** | **11** | **14** | **16** | **19** | **22** |
|---|---|---|---|---|---|---|---|---|---|---|---|---|
| Series | | | | | Series 1x | | | | | | | |
| Displacement geometric, per revolution | | | $V_g$ | cm³ | 4 | 5,5 | 8 | 11 | 14 | 16 | 19 | 22,5 |
| Pressure at suction port S [1] | | absolute | $p_e$ | bar | 0,7 ... 3 | | | | | | | |
| Maximum continuous pressure | | | $p_1$ | bar | 250 | 250 | 250 | 250 | 250 | 250 | 210 | 180 |
| Maximum intermittent pressure [2] | | | $p_2$ | bar | 280 | 280 | 280 | 280 | 280 | 280 | 230 | 210 |
| Maximum pressure peaks | | | $p_3$ | bar | 300 | 300 | 300 | 300 | 300 | 300 | 250 | 230 |
| Minimum speed at | $\nu$ = 12 mm²/s | $p$ < 100 bar | $n_{min}$ | rpm | 600 | 500 | 500 | 500 | 500 | 500 | 500 | 500 |
| | | $p$ = 100 ... 180 bar | $n_{min}$ | rpm | 1200 | 1200 | 1000 | 1000 | 800 | 800 | 800 | 800 |
| | | $p$ = 180 bar ... $p_2$ | $n_{min}$ | rpm | 1400 | 1400 | 1400 | 1200 | 1000 | 1000 | 1000 | 1000 |
| | $\nu$ = 25 mm²/s | at $p_2$ | $n_{min}$ | rpm | 700 | 700 | 700 | 600 | 500 | 500 | 500 | 500 |
| Maximum speed | | at $p_2$ | $n_{max}$ | rpm | 4000 | 4000 | 4000 | 3500 | 3000 | 3000 | 3000 | 2500 |

| **Size** | | | | | **4** | **5** | **8** | **11** | **14** | **16** | **19** | **22** |
|---|---|---|---|---|---|---|---|---|---|---|---|---|
| Series | | | | | Series 2x | | | | | | | |
| Displacement geometric, per revolution | | | $V_g$ | cm³ | 4 | 5,5 | 8 | 11 | 14 | 16 | 19 | 22,5 |
| Pressure at suction port S [1] | | absolute | $p_e$ | bar | 0,7 ... 3 | | | | | | | |
| Maximum continuous pressure | | | $p_1$ | bar | 250 | 250 | 250 | 250 | 250 | 250 | 250 | 220 |
| Maximum intermittent pressure [2] | | | $p_2$ | bar | 280 | 280 | 280 | 280 | 280 | 280 | 280 | 250 |
| Maximum pressure peaks | | | $p_3$ | bar | 300 | 300 | 300 | 300 | 300 | 300 | 300 | 290 |
| Minimum speed at | $\nu$ = 12 mm²/s | $p$ < 100 bar | $n_{min}$ | rpm | 600 | 500 | 500 | 500 | 500 | 500 | 500 | 500 |
| | | $p$ = 100 ... 180 bar | $n_{min}$ | rpm | 1200 | 1200 | 1000 | 1000 | 800 | 800 | 800 | 800 |
| | | $p$ = 180 bar ... $p_2$ | $n_{min}$ | rpm | 1400 | 1400 | 1400 | 1200 | 1000 | 1000 | 1000 | 1000 |
| | $\nu$ = 25 mm²/s | at $p_2$ | $n_{min}$ | rpm | 700 | 700 | 700 | 600 | 500 | 500 | 500 | 500 |
| Maximum speed | | at $p_2$ | $n_{max}$ | rpm | 4000 | 4000 | 4000 | 3500 | 3000 | 3000 | 3500 | 3500 |

| **Size** | | | | | **25** | **28** |
|---|---|---|---|---|---|---|
| Series | | | | | Series 2x | |
| Displacement geometric, per revolution | | | $V_g$ | cm³ | 25 | 28 |
| Pressure at suction port S [1] | | absolute | $p_e$ | bar | 0,7 ... 3 | |
| Maximum continuous pressure | | | $p_1$ | bar | 195 | 170 |
| Maximum intermittent pressure [2] | | | $p_2$ | bar | 225 | 200 |
| Maximum pressure peaks | | | $p_3$ | bar | 265 | 240 |
| Minimum speed at | $\nu$ = 12 mm²/s | $p$ < 100 bar | $n_{min}$ | rpm | 500 | 500 |
| | | $p$ = 100 ... 180 bar | $n_{min}$ | rpm | 800 | 800 |
| | | $p$ = 180 bar ... $p_2$ | $n_{min}$ | rpm | 1000 | 1000 |
| | $\nu$ = 25 mm²/s | at $p_2$ | $n_{min}$ | rpm | 500 | 500 |
| Maximum speed | | at $p_2$ | $n_{max}$ | rpm | 3000 | 3000 |

[1] In the case of tandem pumps, the suction-side pressure difference between the individual pump stages must not exceed 0.5 bar.
[2] Limited service life with threaded line ports and $p_2$ > 210 bar

## General technical data

| | | | |
|---|---|---|---|
| Weight | $m$ | kg | See chapter Dimensions |
| Installation position | | | No restrictions |
| Mounting type | | | Flange or through-bolting with spigot |
| Line connections | | | See chapter Dimensions |
| Direction of rotation, viewed on drive shaft | | | Clockwise or counter-clockwise, the pump may only be driven in the direction indicated |
| Drive shaft loading | | | Axial and radial forces only after consultation |
| Ambient temperature range | $t$ | °C | -30 to +80 with NBR seals (NBR = nitrile rubber) |
| | | | -20 to +110 with FKM seals (FKM = fluoroelastomer) |

## Corrosion protection

| | | |
|---|---|---|
| Version 1 (phosphated):<br>Unit with low corrosion protection | The surface serves for protection against flash rust during transport or as priming for painting. | |
| Version 2 (galvanized, passivated):<br>Unit with corrosion protection | Degree of corrosion and rust according to DIN EN ISO 9227 | Test duration 96 h: no red rust |

**Note**

- Safety requirements pertaining to the whole systems are to be observed.
- Please contact us for applications with frequent load changes.

## Pressure definition

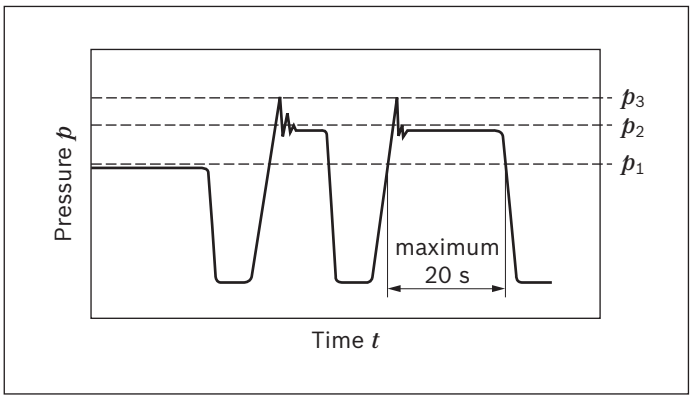


$p_1$: Continuous pressure max.
$p_2$: Intermittent pressure max.
$p_3$: Pressure peaks max.

| Determining the operating characteristics | | |
|---|---|---|
| Flow | $q_v = \frac{V_g \times n \times \eta_v}{1000}$ | [l/min] |
| Torque | $M = \frac{V_g \times \Delta p}{20 \times \pi \times \eta_{hm}}$ | [Nm] |
| Power | $P = \frac{2 \pi \times M \times n}{60000} = \frac{q_v \times \Delta p}{600 \times \eta_t}$ | [kW] |

**Key**

| | |
|---|---|
| $V_g$ | Displacement per revolution [cm³] |
| $\Delta p$ | Differential pressure [bar] |
| $n$ | Rotational speed [rpm] |
| $\eta_v$ | Volumetric efficiency |
| $\eta_{hm}$ | Hydraulic-mechanical efficiency |
| $\eta_t$ | Total efficiency ($\eta_t = \eta_v \cdot \eta_{hm}$) |

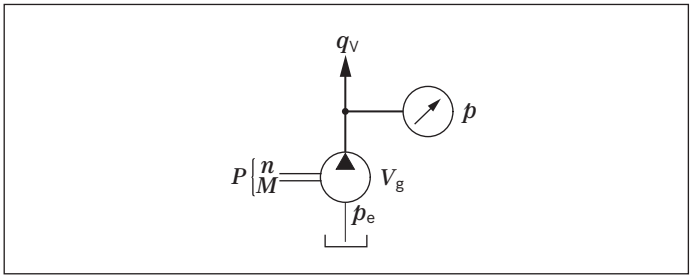


**Note**

- You can find diagrams for a rough calculation in chapter "Diagrams / Characteristic curves"..

## Hydraulic fluids

The external gear unit is designed for operation with HLP mineral oil according to DIN 51524, 1-3. Under higher load, however, Bosch Rexroth recommends at least HLP compliant with DIN 51524 Part 2.
See the following data sheet for application instructions and requirements for selecting hydraulic fluid, behavior during operation as well as disposal and environmental protection before you begin project planning:

- 90220: Hydraulic fluids based on mineral oils and related hydrocarbons

Other hydraulic fluids on request.

**Selection of hydraulic fluid**
Bosch Rexroth evaluates hydraulic fluids on the basis of the Fluid Rating according to the technical data sheet 90235.
Hydraulic fluids with positive evaluation in the Fluid Rating are provided in the following technical data sheet:

- 90245: Bosch Rexroth Fluid Rating List for Rexroth hydraulic components (pumps and motors)

The hydraulic fluid should be selected so that the operating viscosity in the operating temperature range is within the optimum range ($\nu_{opt}$; see selection diagram).

**Viscosity and temperature of hydraulic fluids**

| | |
|---|---|
| **Viscosity range** | |
| Permissible in continuous operation | $\nu$ = 12 ... 800 mm²/s |
| Recommended in continuous operation | $\nu_{opt}$ = 20 ... 100 mm²/s |
| Permissible for cold start | $\nu_{max}$ ≤ 2000 mm²/s |
| **Temperature range** | |
| With NBR seals (NBR = nitrile rubber) | $t$ = -30 °C ... +80 °C |
| With FKM seals (FKM = fluoroelastomer) | $t$ = -20 °C ... +110 °C |

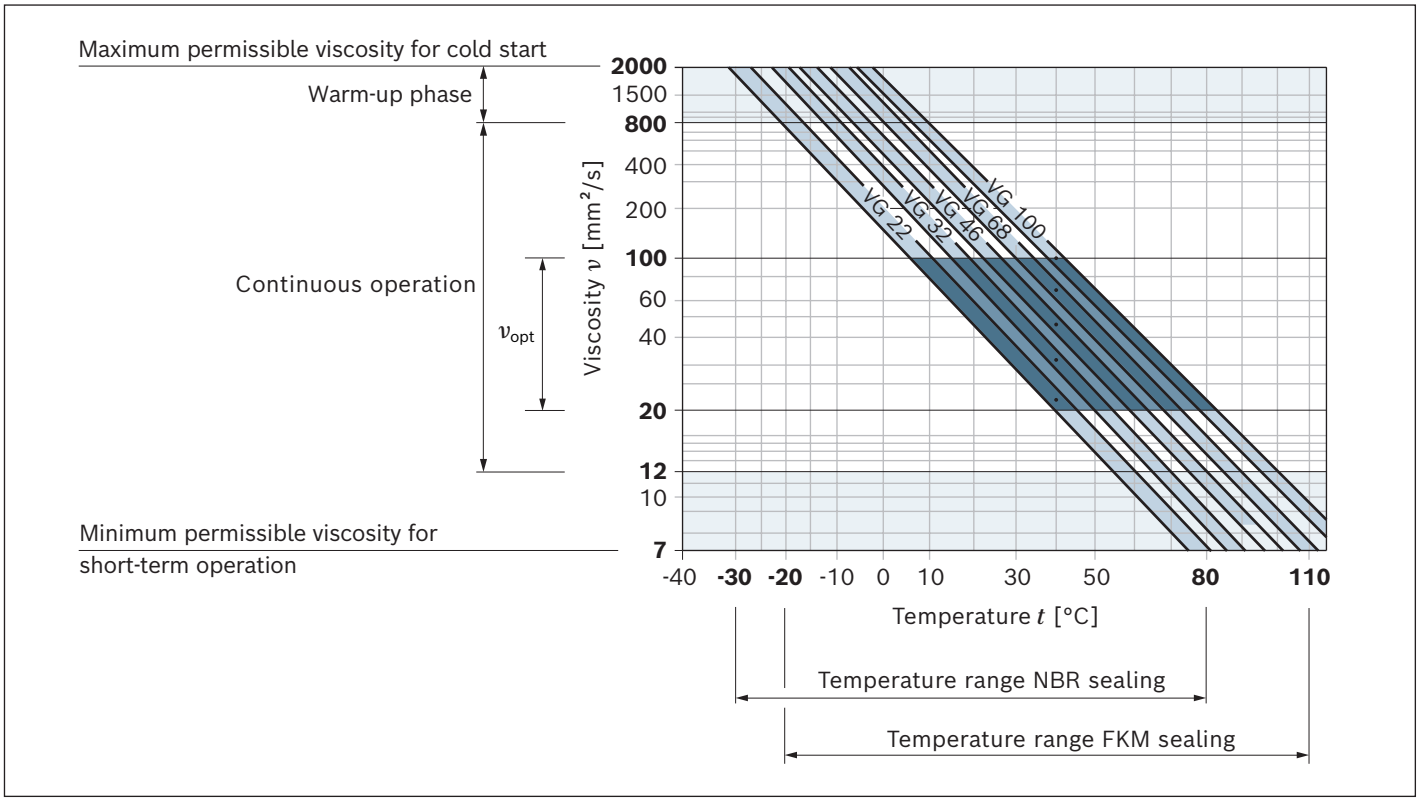


Observe the instructions for the filtration of the hydraulic fluid (see chapter Project planning information).

## Direction of rotation

The dimensional drawings in the chapter Dimensions represent pumps for clockwise rotation. The position of the drive shaft or the position of suction and pressure port changes for counter-clockwise rotation.

**Direction of rotation, viewed on drive shaft**

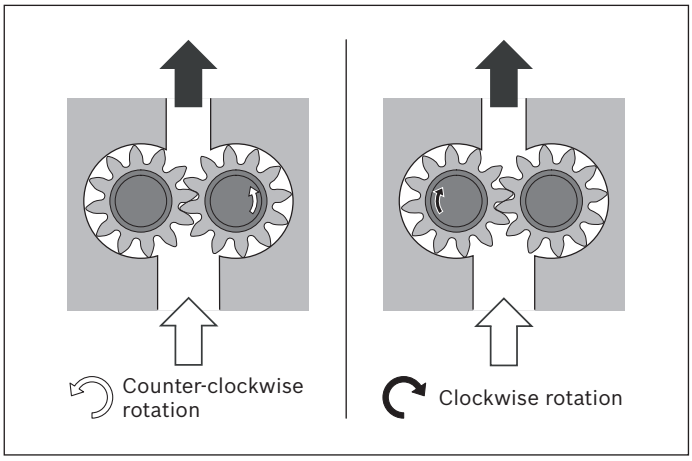

## Drives

**1. Elastic couplings**

- The coupling must not transfer any radial and axial forces onto the pump.
- The maximum admissible radial run-out deviation from the shaft to the fitting slot is 0.2 mm.
- Admissible shaft shifting see installation information of the coupling manufacturers.

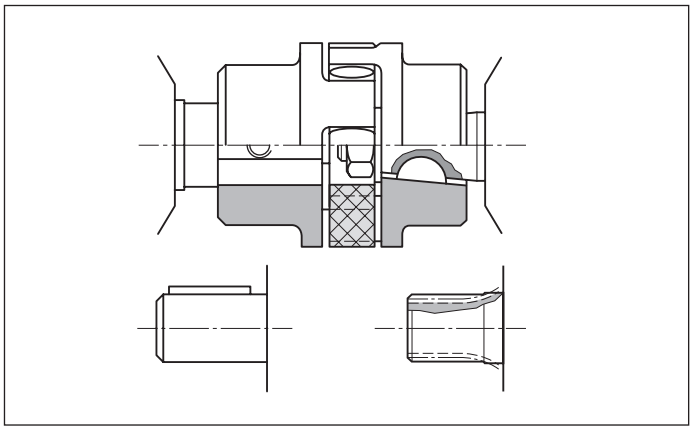

**2. Coupling sleeve**

- To be used on splined shaft profile according to DIN and SAE.
- Attention: No radial or axial forces are permitted on the pump shaft or coupling sleeve. The coupling sleeve must be free to move axially.
- The distance between the pump drive shaft and drive shaft on the customer side must $2^{+1}$ mm.
- Provide installation space for the snap ring.
- Oil-bath or oil-mist lubrication is required.

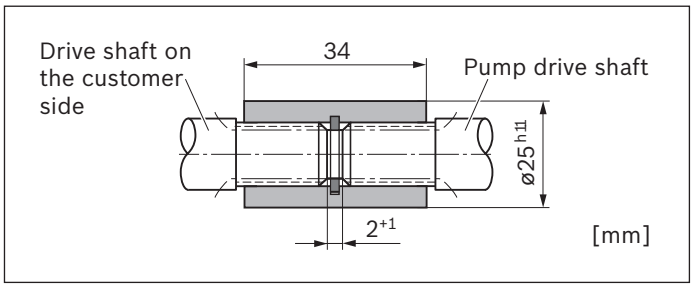


**3. Tang drive coupling**

- For attaching the pump directly to an electric motor or combustion engine, gear, etc.
- The pump shaft has a special tang drive and driver (**3**) (scope of delivery see offer drawing)
- There is no shaft sealing
- Drive-side installation and sealing according to the following recommendations and dimensions
- Drive shaft on the customer side (**1**)
  - Case-hardening steel DIN EN 10084 e.g. 20MnCrS5 case-hardened 0.6 mm deep; HRC $60^{\pm 3}$
  - Seal ring running surface ground without rifling $R_t \leq 4$ µm
- Radial shaft seals on the customer side (**2**)
  - Provide with rubber cover (see DIN 3760, type AS or double-lipped ring)
  - Provide installation edge with 15° slant or install shaft seal with protection sleeve

**AZPF-1x**

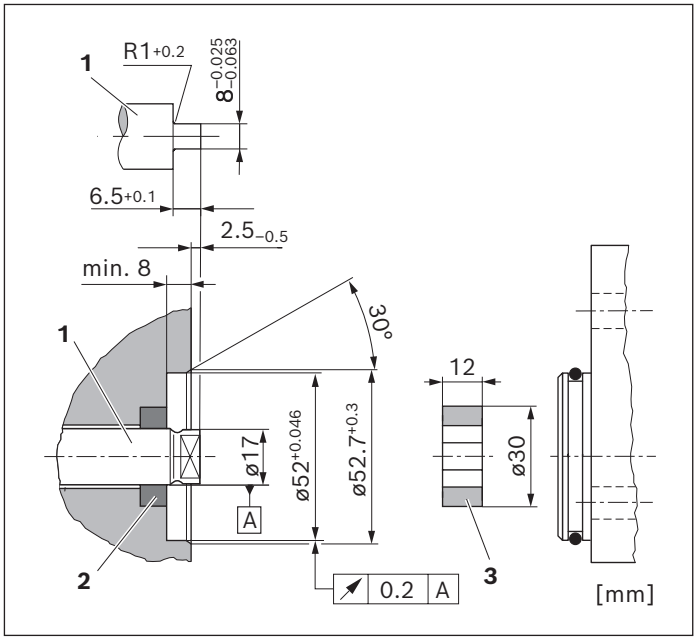


**AZPF-2x**

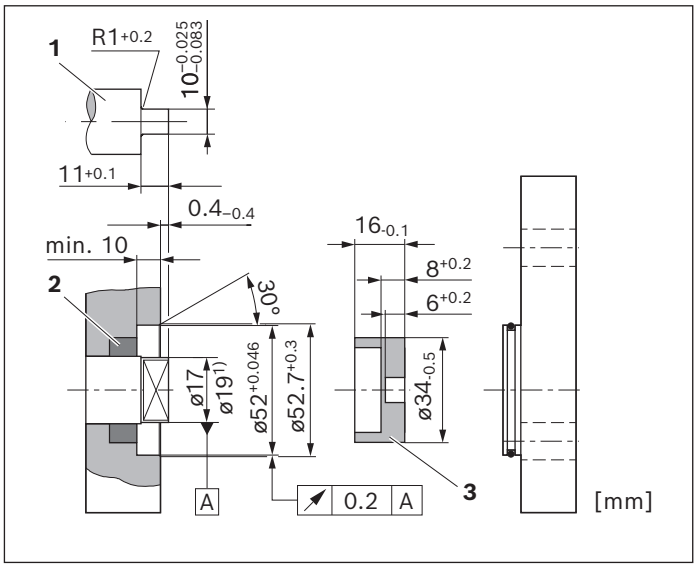


1) See offer drawing

## Maximum transferable drive torques

### Splined shafts

| Drive shaft | | $M_{max}$ | Size | $p_{2\ max}$ Serie 1x | $p_{2\ max}$ Serie 2x |
|---|---|---|---|---|---|
| **Code** | **Designation** | **Nm** | | **bar** | **bar** |
| **F** | DIN 5482 B17 × 14 | 100 | 4 ... 16 | 280 | 280 |
| | | | 19 | 230 | |
| | | | 22 | 210 | 250 |
| | | | 25 | - | 225 |
| | | | 28 | - | 200 |
| **R** | SAE J744 16-4 9T | 110 | 4 ... 16 | 280 | 280 |
| | | | 19 | 230 | |
| | | | 22 | 210 | 250 |
| | | | 25 | - | 225 |
| | | | 28 | - | 200 |
| **P** | SAE J744 19-4 11T | 180 | 4 ... 16 | 280 | 280 |
| | | | 19 | 230 | |
| | | | 22 | 210 | 250 |
| | | | 25 | - | 225 |
| | | | 28 | - | 200 |

### Tapered shafts

| Drive shaft | | $M_{max}$ | Size | $p_{2\ max}$ Serie 1x | $p_{2\ max}$ Serie 2x |
|---|---|---|---|---|---|
| **Code** | **Type** | **Nm** | | **bar** | **bar** |
| **C** | 1 : 5 | 155 | 4 ... 16 | 280 | 280 |
| | | | 19 | 230 | |
| | | | 22 | 210 | 250 |
| | | | 25 | - | 225 |
| | | | 28 | - | 200 |
| **H** | 1 : 8 | 160 | 4 ... 16 | 280 | 280 |
| | | | 19 | 230 | |
| | | | 22 | 210 | 250 |
| | | | 25 | - | 225 |
| | | | 28 | - | 200 |

# Diagrams/characteristic curves

## Flow characteristic curves

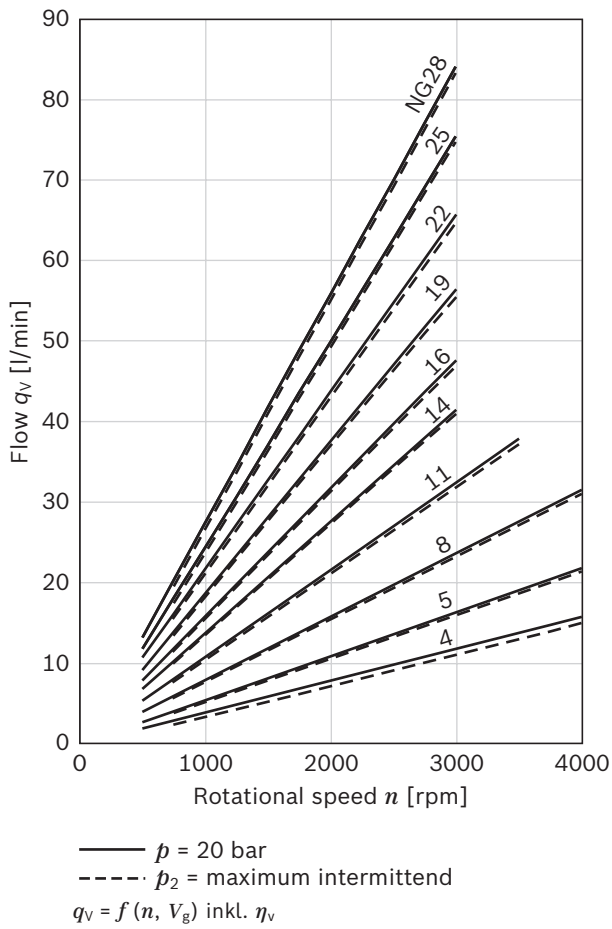


**Note**

- Characteristic curves measured at $\nu$ = 32 mm²/s and $t$ = 50 °C.

## Power diagrams

### Size 4

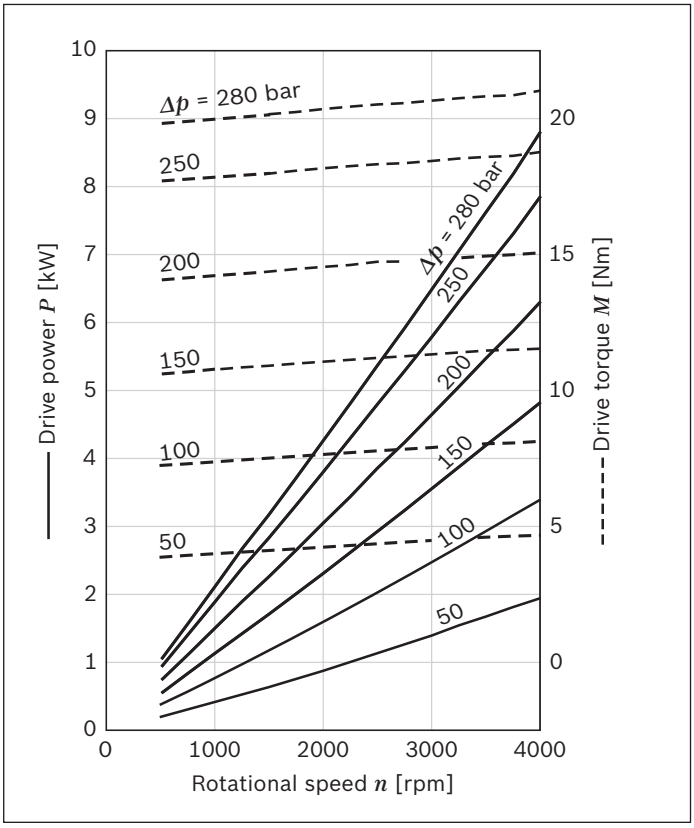


### Size 5

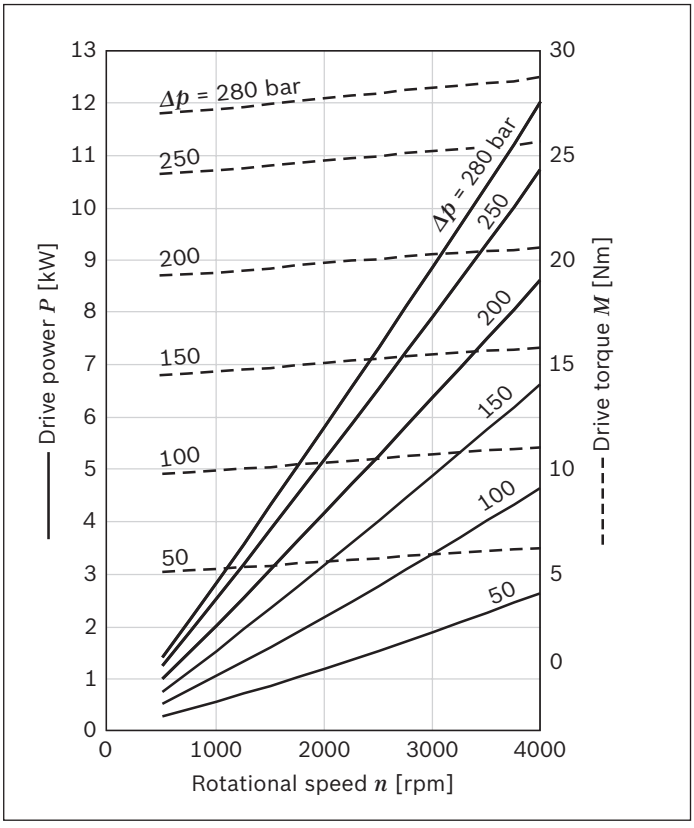

# Dimensions

## Drive shafts

### Tapered shaft 1:5
(for front cover B, P, N)

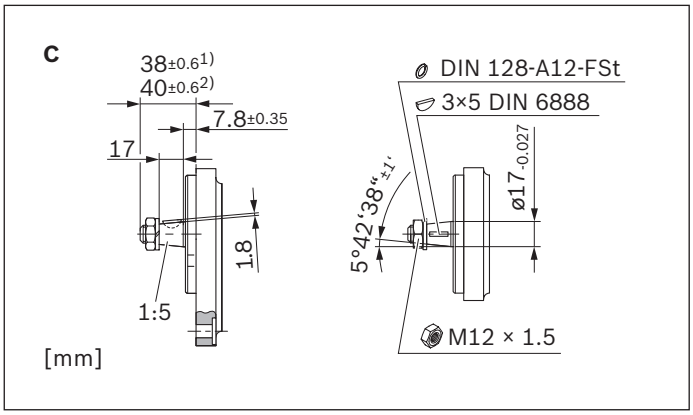


### Tapered shaft 1:5
(for outrigger bearing A, G)

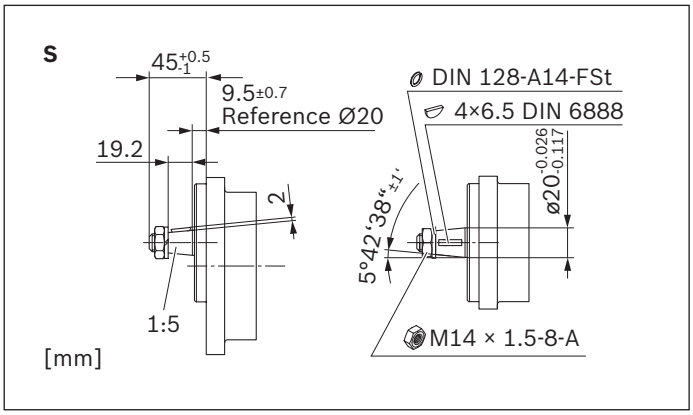


1) In combination with front cover B
2) In combination with front cover P and front cover N

### Tapered shaft 1:8

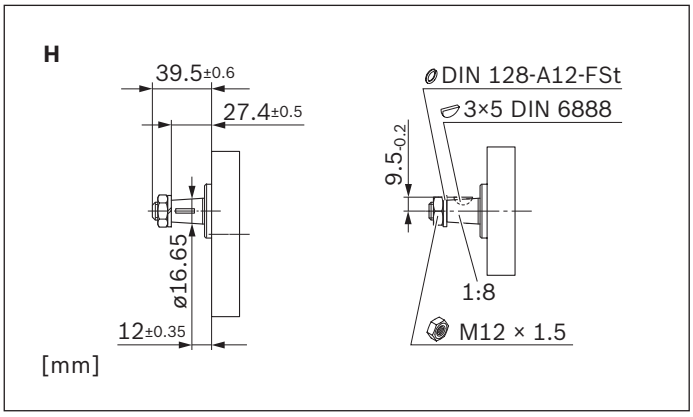


### Splined shaft (SAE J744 16-4 9T)

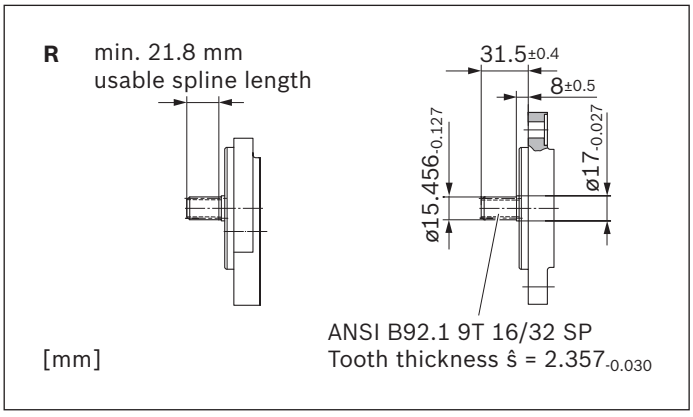


### Splined shaft (SAE J744 19-4 11T)

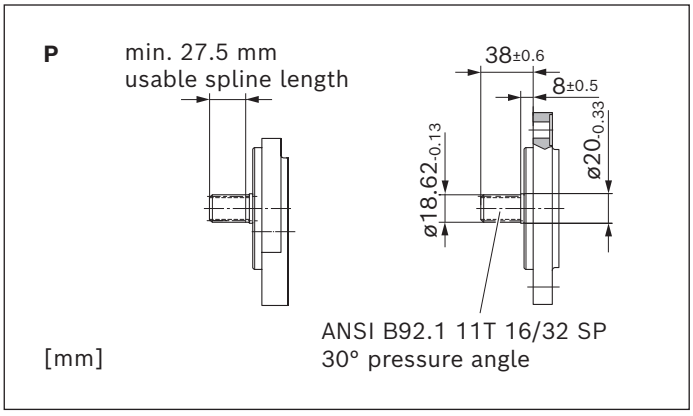


### Splined shaft (DIN 5482 B17 x 14)

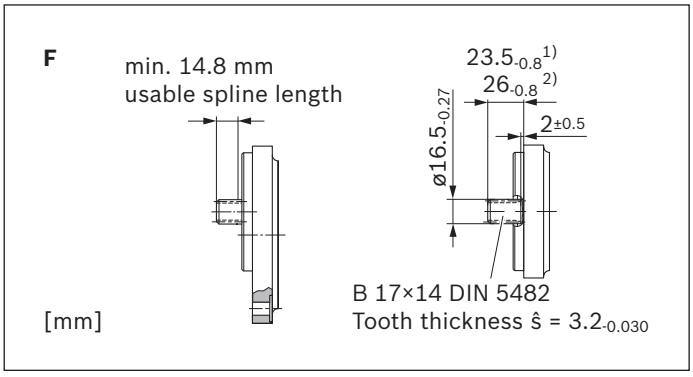


1) In combination with front cover B
2) In combination with front cover P and front cover N

**2-bolt mounting Ø50mm, connection variant N**

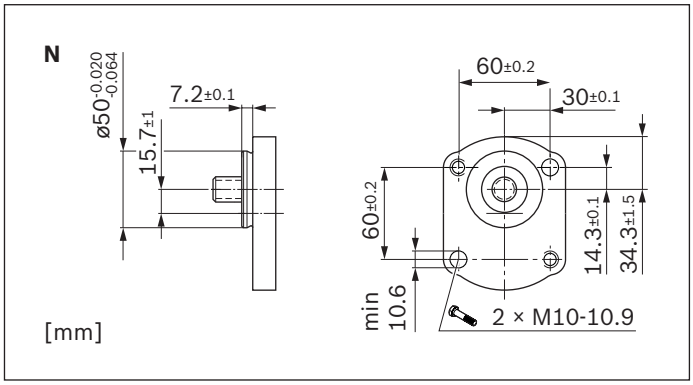


**2-bolt mounting Ø50 mm, connection variant P**

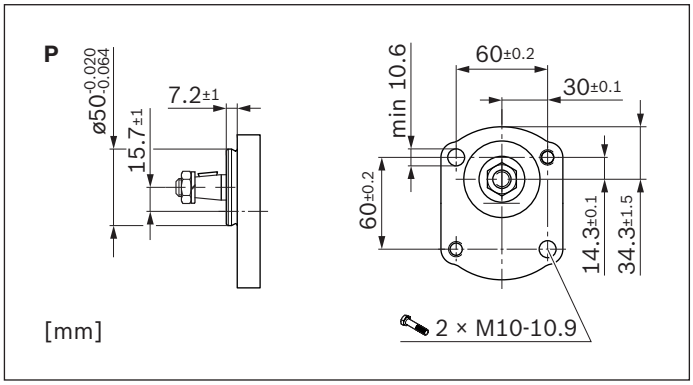


**4-bolt mounting Ø52 mm, with O-ring**

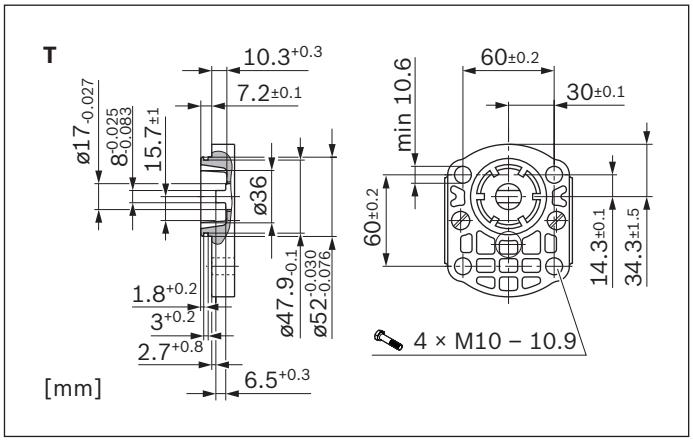


**Outrigger bearing Ø80 mm, type 1**

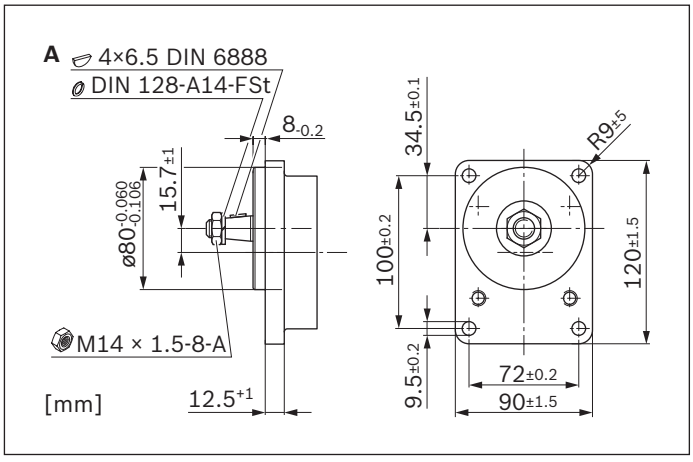


**Outrigger bearing Ø80 mm, type 2**

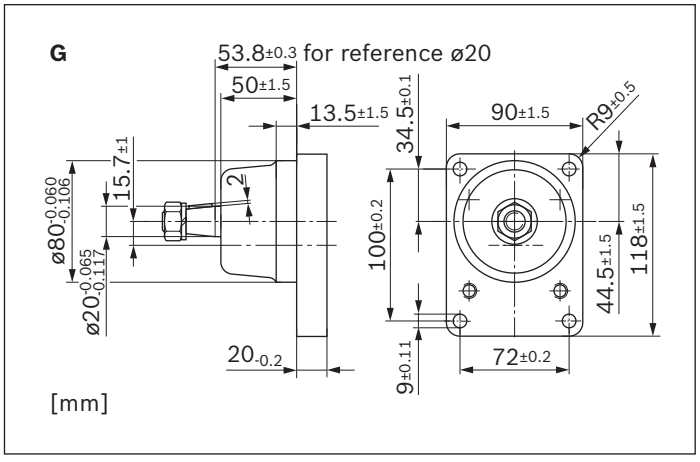

## Line connections

### Pipe thread according to ISO 228-1

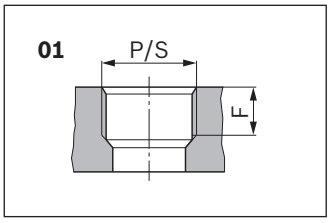


| NG | Pressure side | | Suction side | |
|---|---|---|---|---|
| | P | F | S | F |
| | | mm | | mm |
| 4 ... 16 | G 1/2 | 16 | G 3/4 | 16 |
| 19 ... 28 | G 3/4 | | G 1 | 19 |

### Metric threads according to ISO 6149, O-ring

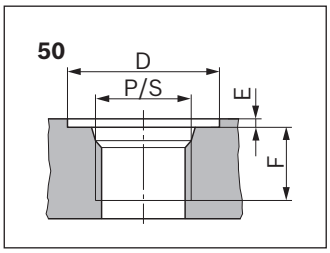


| NG | Pressure side | | | | Suction side | | | |
|---|---|---|---|---|---|---|---|---|
| | P | D | E | F | S | D | E | F |
| | | mm | mm | mm | | mm | mm | mm |
| 4 ... 5 | M18 × 1.5 | 29 | 0,5 | 16 | M18 × 1.5 | 29 | 0,5 | 16 |
| 8 ... 16 | M22 × 1.5 | 34 | | 18 | M27 × 2 | 40 | | 19 |
| 19 ... 28 | | | | | M33 × 2 | 46 | | 22 |

### UN-thread according to ISO 11926-1 / ASME B 1.1, O-ring

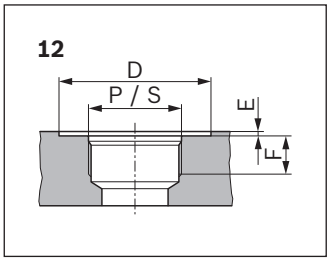


| NG | Pressure side | | | | Suction side | | | |
|---|---|---|---|---|---|---|---|---|
| | P | D | E | F | S | D | E | F |
| | | mm | mm | mm | | mm | mm | mm |
| 4 ... 5 | 3/4-16 UNF-2B | 30,2 | 0,5 | 14 | 7/8-14 UNF-2B | 35 | 0,5 | 17 |
| 8 ... 14 | 7/8-14 UNF-2B | 35 | | 17 | 1 1/16-12 UN-2B | 45 | | 19 |
| 16 ... 28 | | | | | 1 5/16-12 UN-2B | 50 | | 20 |

### Square flange

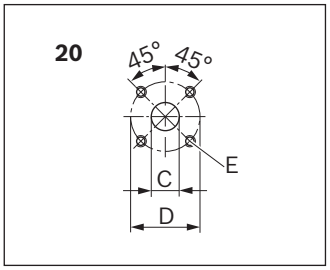


| NG | Pressure side | | | Suction side | | |
|---|---|---|---|---|---|---|
| | C | D | E | C | D | E |
| | mm | mm | | mm | mm | |
| 4 ... 5 | 15 | 35 | M6; 13 mm deep | 15 | 40 | M6; 13 mm deep |
| 8 ... 22 | | | | 20 | | |
| 19 ... 28 [1] | | | | 26 | 55 | M8; 13 mm deep |

[1] Serie 2x

### Square flange

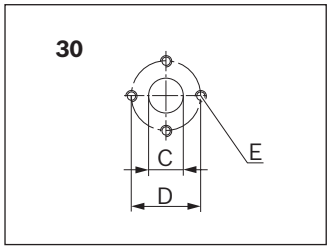


| NG | Pressure side | | | Suction side | | |
|---|---|---|---|---|---|---|
| | C | D | E | C | D | E |
| | mm | mm | | mm | mm | |
| 4 ... 8 | 13,5 | 30,2 | M6; 13 mm deep | 13,5 | 30,2 | M6; 13 mm deep |
| 11 ... 28 | | | | 20 | 39,7 | M8; 13 mm deep |

**Note**
Depending on the design variant, the size of the threaded connections may differ from the sizes specified in the table. See information in the dimensional drawings.

**Tapered shaft 1:5 with 2-bolt mounting Ø50 mm**

AZPF – 1X – ... **CN20**MB

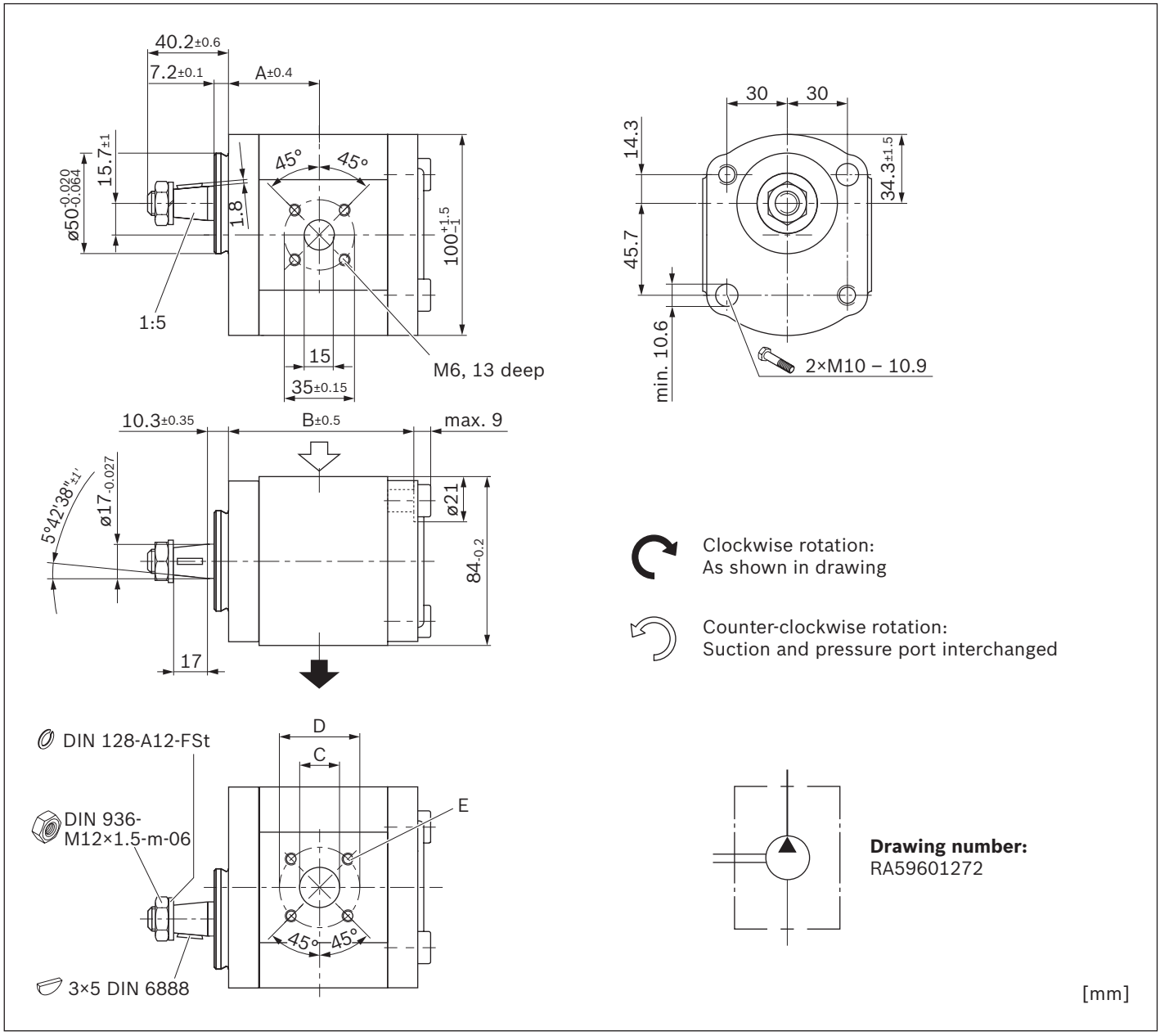


| NG | Material number | | Maximum pressure intermittend | Maximum speed | Weight | Dimensions | | | | |
|---|---|---|---|---|---|---|---|---|---|---|
| | Direction of rotation | | $p_2$ | $n_{max}$ | $m$ | A | B | C | D | E |
| | counter-clockwise | clockwise | bar | rpm | kg | mm | mm | mm | mm | |
| 4 | 0 510 215 306 | 0 510 215 006 | 280 | 4000 | 2.6 | 37.4 | 73.7 | 15 | 40 | |
| 5 | 0 510 315 304 | 0 510 315 004 | 280 | 4000 | 2.6 | 38.6 | 76.2 | 15 | 40 | |
| 8 | 0 510 415 313 | 0 510 415 005 | 280 | 4000 | 2.8 | 40.7 | 80.3 | 20 | 40 | |
| 11 | 0 510 515 310 | 0 510 515 004 | 280 | 3500 | 2.9 | 44.5 | 85.3 | 20 | 40 | M6; 13 mm deep |
| 14 | | 0 510 515 015 | 280 | 3000 | 3 | 45 | 90.3 | 20 | 40 | |
| 16 | 0 510 615 314 | | 280 | 3000 | 3.1 | 45 | 93.7 | 20 | 40 | |
| 19 | 0 510 615 341 | | 230 | 3000 | 3.2 | 45 | 98.7 | 20 | 40 | |

# Project planning information

## Technical data

All mentioned technical data are dependent on manufacturing tolerances and are applicable for certain boundary conditions.
Note that certain deviations are therefore possible and that technical data may vary when certain boundary conditions (e.g., viscosity) change.
Pumps delivered by Bosch Rexroth are tested for function and performance.
The pump may only be operated with the permissible data (see chapter "Technical data").

**Characteristic curves**
When dimensioning the gear pump, observe the maximum possible application data on the basis of the characteristic curves shown.

## Application information

External gear units are not approved in on-highway vehicles for safety-relevant functions, as well as functions in the drive train, for steering, braking and level regulation. Classified as on-highway vehicles are e.g. vehicles such as motorbikes, private cars, trucks, vans, freight cars, buses and trailers. The European vehicle classes L (motorbikes), M (private cars), N (vehicles for transporting goods such as trucks and vans) and O (trailers and semi-trailers) serve as reference.

## Filtration of the hydraulic fluid

Since the majority of premature failures in gear pumps occur due to contaminated hydraulic fluid, filtration should maintain a cleanliness level of 20/18/15 as defined by ISO 4406. Thus contamination can be reduced to an acceptable degree in terms of particle size and concentration.
Bosch Rexroth generally recommends full-flow filtration.
The basic contamination of the hydraulic fluid filled in should not exceed class 20/18/15 as defined by ISO 4406. New fluids are often above this value. In such instances, a filling device with a special filter should be used.
Bosch Rexroth is not liable for wear due to contamination.
For hydraulic systems or devices with function-related, critical failure effects, such as steering and brake valves, the type of filtration selected must be adapted to the sensitivity of these devices.

**Notice**
- When used as an auxiliary steering pump, the vehicle manufacturer should make sure that the steering system continues to operate safely as per ECE R-79 even if the auxiliary steering pump fails.

## Further information

Installation drawings and dimensions are valid at date of publication, subject to modifications.
Further information and notes on project planning can be found in the “General Operating Instructions for External Gear Units” (07012-B, chapter 5.5).