Oleodinamica 2MP HS-A-08-2-14 SAE 08 two-way aluminium cartridge housing

Manufacturer: Oleodinamica 2MP

Manufacturer part number / published order designation: HS-A-08-2-14

Published model: HS-A-08-2-14

About this compilation

Prepared by Hydmaster from selected manufacturer documentation. Original technical pages follow without cropped drawings, rewritten data or altered units. This cover and index are Hydmaster editorial material, not a manufacturer-issued exact-execution datasheet.

Coverage: selected pages relevant to the identified size and configuration. Other options or neighbouring models retained on an original page apply only where explicitly identified.

Execution notes and conditions

The complete selected article is documented by the supplier. The factory sheet prints the HS ordering legend and actual size rows, rather than this complete assembled order code as a separate row. Only the fields observed in this selected offer are reconciled to that legend. Only printed18.2 HS two-way design applies; left-hand18.1 is a separate housing family. No verified working pressure, flow or mass. Illustration representative, not photo.

Source-page index

Source page numbers below are physical pages of each complete original PDF. The original printed page labels and technical content remain unchanged. Compiled page numbers count this cover/index.

Source A: Original manufacturer two-way housing drawing, exact size rows and selected-code field legend. Left-side18.1 is a separate HS_06 design and is not assigned to this article.

Original pages	Compiled pages	Relevant content
72	2	Original manufacturer two-way housing drawing, exact size rows and selected-code field legend. Left-side18.1 is a separate HS_06 design and is not assigned to this article.

18.1 Collettore per valvola 3/4-16 UNF (SAE 08), P-T 1/4" (3/8") BSP / In-line housing for 3/4-16 UNF (SAE 08) valve, P-T 1/4" (3/8") BSP

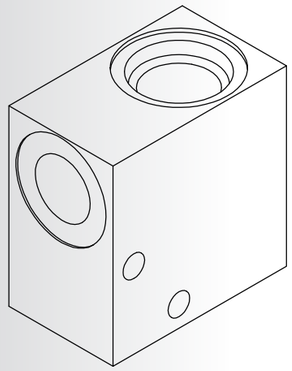

Schema idraulico /
Hydraulic scheme

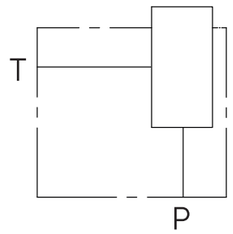

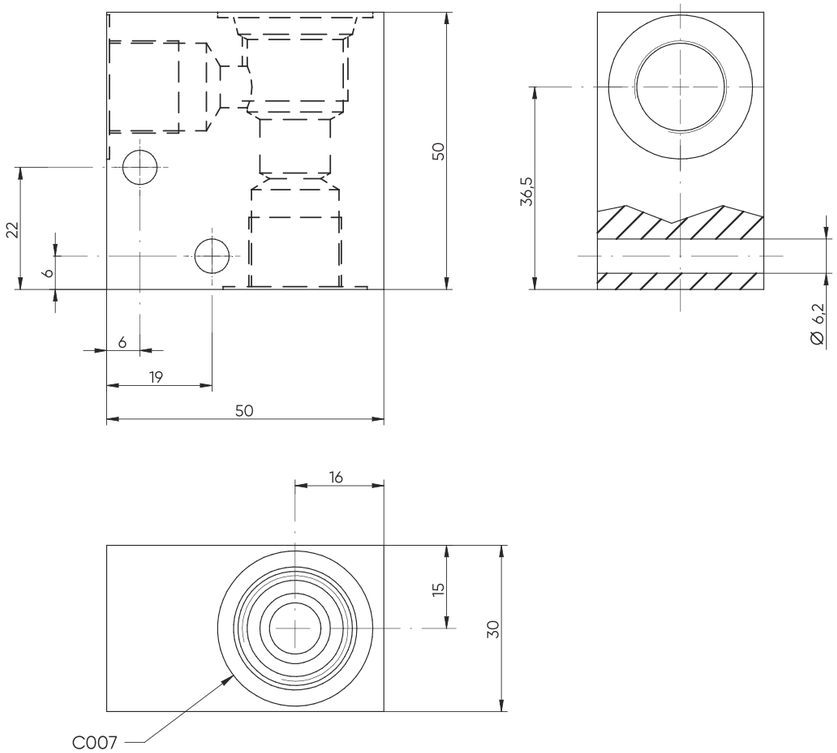

HS_ 06 – __ – 10

S = STEEL
A = ALUMINIUM

14 = BSP 1/4G
38 = BSP 3/8G

18.2 Collettore 2 vie per valvola SAE 08-10-12-16 / 2 Way in-line housing for SAE 08-10-12-16 valve

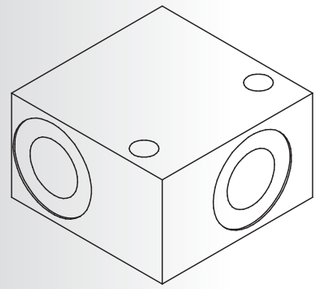

Schema idraulico /
Hydraulic scheme

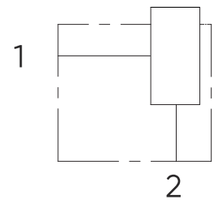

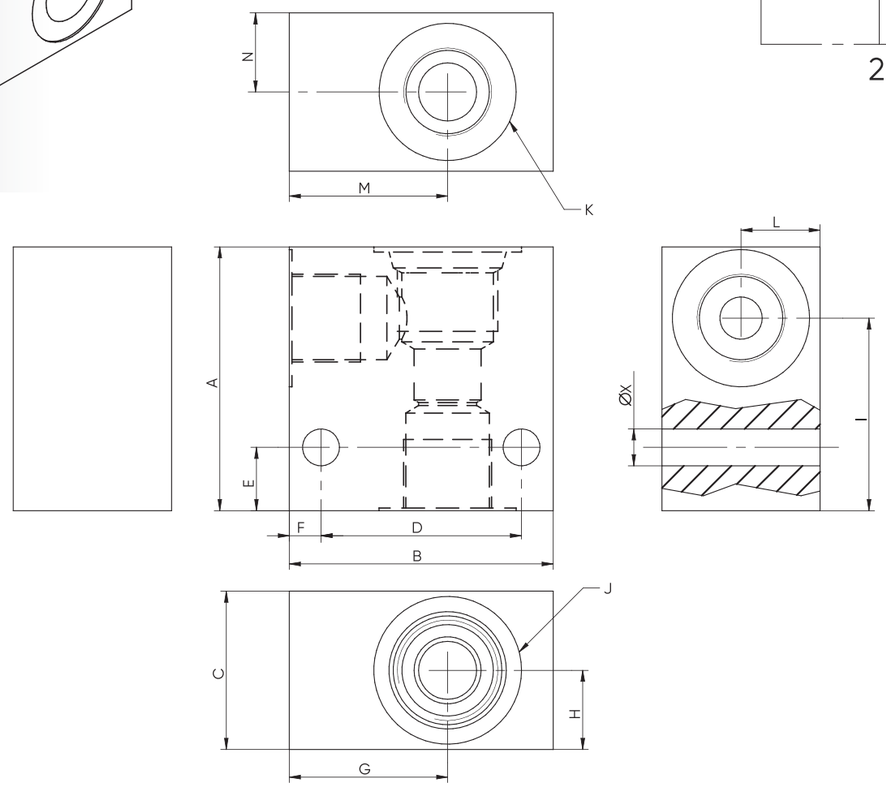

Size	A	B	C	D	E	F	G	H	I	L	M	N	J	Cavity	K	X
HS 08-2	50	50	30	38	12	6	30	15	36.5	15	30	15	SAE 08-02	C007	1/4"BSP - 3/8"BSP	6.5
HS 10-2	60	60	40	48	12	6	37	20	41.5	20	37	20	SAE 10-02	C035	3/8"BSP - 1/2"BSP	6.5
HS 12-2	80	70	50	54	8	8	40	25	54.5	25	40	25	SAE 12-02	C045	1/2"BSP - 3/4"BSP	8.5
HS 16-2	80	80	50	60	10	10	45	25	55	25	45	25	SAE 16-02	C023	3/4"BSP - 1"BSP	11

HS – _ – ___ – 2 – ___

S = STEEL
A = ALUMINIUM

08 = 3/4-16UNF
10 = 7/8-14UNF
12 = 1.1/16-12 UNF
16 = 1.5/16-12 UNF

14 = 1/4"
38 = 3/8"
12 = 1/2"
34 = 3/4"
100 = 1"